Supreme Court, U. S.
FILED
JUL 16 1975
MICHAEL RODAK, JR., CLERK

APPENDIX

532

Supreme Court of the United States

OCTOBER TERM, 1974

No. 74-1033

C. MARSHALL DANN, COMMISSIONER OF PATENTS AND TRADEMARKS,

Petitioner

—*v.*—

THOMAS R. JOHNSTON

ON WRIT OF CERTIORARI TO THE UNITED STATES COURT OF CUSTOMS AND PATENT APPEALS

PETITION FOR A WRIT OF CERTIORARI FILED FEBRUARY 18, 1975
CERTIORARI GRANTED MAY 12, 1975

Supreme Court of the United States

OCTOBER TERM, 1974

No. 74-1033

C. MARSHALL DANN, COMMISSIONER OF PATENTS AND TRADEMARKS,

Petitioner

—*v.*—

THOMAS R. JOHNSTON

ON WRIT OF CERTIORARI TO THE UNITED STATES COURT OF CUSTOMS AND PATENT APPEALS

INDEX

	Page
Docket Entries	1
Specification	3
Application Drawings	68
Examiner's Answer dated November 3, 1970	86
Portion of Dirks Patent 3,343,133	94
Claims 20-24	107
Notice of Appeal to Court of Customs and Patent Appeals dated December 28, 1971	110
*Opinion of the United States Court of Customs and Patent Appeals dated September 19, 1974	1A
Supreme Court's Order of May 12, 1975, granting the petition for a writ of certiorari	116

---

* Not reprinted in Joint Appendix. Citations are to appendix of Petition for Writ of Certiorari.

DOCKET ENTRIES

IN THE MATTER OF THE APPLICATION
OF THOMAS R. JOHNSTON

Board of Appeals Serial No. 624,741

Filing Date March 20, 1972

Term and Docket No. 9088

Date	Proceedings and Orders

Counsel for appellant: Morton C. Jacobs

Commissioner of Patents

March 28, 1972 Motion of appellant to suspend all proceedings in this appeal until final action of the Supreme Court in Ex parte Bension, et al No. 71-485 P A No. 8376, filed.

March 31, 1972 Above motion, granted.

February 15, 1973 Suspension lifted pursuant to letters of counsel dated January 26, and February 15, 1973.

September 10, 1973 PRINTED RECORD, FILED.

October 12, 1973 Stipulation to extend time for filing appellant's brief to November 19, 1973, filed and approved.

November 13, 1973 Stipulation to extend time for filing appellant's brief to December 19, 1973, filed.

November 15, 1973 Above stipulation, approved. See letter in jacket.

December 13, 1973 Motion (joint) to extend time for filing appellant's brief to January 18, 1974 and Commissioner's brief to 60 days from filing of appellant's brief, filed and granted.

Date	Proceedings and Orders
January 21, 1974	BRIEF FOR APPELLANT, FILED.
March 21, 1974	BRIEF FOR COMMISSIONER, FILED.
April 4, 1974	Motion of appellant to extend time for filing a Reply Brief to April 25, 1974, filed.
April 9, 1974	Above motion, granted.
April 24, 1974	REPLY BRIEF FOR APPELLANT, filed.
May 8, 1974	Argued and submitted.
August 12, 1974	Motion of appellant for leave to file publication, filed.
August 26, 1974	Opposition by Commissioner of Patents to above motion filed.
August 30, 1974	Appellant's reply in support of motion to filed publication filed.
September 3, 1974	Above motion denied, Markey, Chief Judge.
September 19, 1974	REVERSED, Baldwin, Judge. Dissenting opinion by C. J. Markey. Dissenting opinion by Judge Rich.
October 11, 1974	FINAL MANDATE ISSUED TO COMMISSIONER OF PATENTS.
Feb. 18, 1975	Writ of Certiorari No. 74-1033 filed in Supreme Court on Feb. 18, 1975.

[SPECIFICATION]

APPLICATION OF THOMAS R. JOHNSTON, FILED MARCH 21, 1967, SERIAL NUMBER 624,741, FOR MACHINE SYSTEM FOR AUTOMATIC RECORD KEEPING OF BANK CHECKS AND DEPOSITS

Abstract of the Disclosure. An automatic record-keeping system is provided which is based on machine-readable records of the financial transactions (checks or deposit slips) of a bank customer. In addition to the usual data provided on the transaction slips, a set of code characters identifying the bookkeeping category is also provided. A data processor, such as a stored program digital computer, processes all of the machine-readable records, together with a master file carrying individual charts of accounts (i.e. the bookkeeping categories) for the different customers. Output reports are periodically generated on simple forms which present the customer's records in accordance with his own chart of accounts and accounting procedures.

This invention relates to an automatic record-keeping machine system, and more particularly to such a system suitable for record keeping and bank checks and deposits.

Automatic data processing equipments employing digital computers have been developed for the handling of much of the record-keeping operations involved in a banking system. The checks and deposit slips are automatically processed by forming those items as machine-readable records; that is, magnetic ink characters are imprinted on the check, so that magnetic readers are enabled to process these checks and enter the data in a computer system in the form of coded electrical signals. Other character-reading machines operating on an optical principle for automatically reading special optical type fonts are also employed. With such machine systems, most of the extensive data handling required in a bank can be performed automatically.

It has been found that such data processing equipment, with certain additions and modifications, can be employed to process automatically much, if not all, of the

individual record keeping required by a bank's customers to maintain their own personal and business financial records. That is, as a supplement to the conventional, periodic bank statement furnished to a bank customer, a record summary is provided with makes unnecessary much or all of the tedious bookkeeping and accounting that the customers would otherwise have to perform.

Accordingly, it is among the objects of this invention to provide a new and improved machine system for automatic record keeping.

Another object is to provide a new and improved machine system for automatic record keeping that functions with an automatic system for banking operations.

Another object is to provide a new and improved automatic record-keeping system whereby financial records are kept and maintained with a minimum of manual operation.

Another object is to provide a new and improved automatic record-keeping system for many customers, in which a chart of accounts is provided for each customer which is individually adapted to his requirements.

Another object is to provide a new and improved automatic record-keeping system for supplying financial reports to many different customers on printed forms that are small in size and simple in format and adaptable to various accounting procedures.

In accordance with an embodiment of this invention, an automatic record-keeping system is provided which is especially adapted for use with automatic banking devices for machine handling of the transactions (i.e. checks or deposits) of demand-deposit accounts of bank customers. Machine-readable records of each bank transaction are generated directly on the check or the deposit ticket. The data of such records incorporate those required for conventional banking system presently carried on checks (or deposit tickets); namely, the customer's account number, amount of the transaction, and the type of transaction (that is, whether a check or a deposit). Another set of data forming a machine-readable record is provided on each transaction, namely, a set of code characters that identify the bookkeeping classification of

each transaction; this classification code is called the "category number." The category number is entered by the customer on each transaction slip (check or deposit) at the time it is prepared, in the form of a machine-readable record by means of an appropriate device, or in the form of a set of hand-written numeric characters which are converted to a machine-readable record by the customer's bank.

In the customer's bank, upon a deposit being made or a check clearing the bank, the machine-readable transaction records on the imprinted checks or deposit tickets are read by a suitable document-reader device and stored in a transaction file. To process the transaction file, the automatic record-keeping system employs a data processor, such as a programmable electronic digital computer, having certain data storage files and a control system. In addition to the transaction file, a master record-keeping file is used to store all of the records required for each customer in accordance with the customer's own chart of accounts. The latter is individually designed to the customer's needs and also constructed to cooperate with the control system in the processing of the customer's transactions. The control system directs the generation of periodic output reports for the customer which present the customer's transaction records in accordance with his own chart of accounts and desired accounting procedures. Printed forms of conventional size can be used for the output reports, and a simple format can be employed that is adaptable for automatic printing of the different charts of accounts.

The foregoing and other objects of this invention, the various features thereof, and the invention itself may be more fully understood from the following description when read together with the accompanying drawing, in which:

Fig. 1A is a schematic block diagram of a computing machine system for automatic handling of banking transactions and record-keeping thereof in accordance with this invention;

Fig. 1B is a schematic block diagram of certain working storage sections of the memory of Fig. 1A;

Fig. 2 is a schematic flow diagram of a portion of the machine system of Fig. 1A;

Fig. 3 is a schematic flow diagram of another portion of the machine system of Fig. 1A;

Fig. 4 is a face view of a bank check having machine-readable records in accordance with this invention for automatic record keeping in the system of Fig. 1A;

Fig. 5A is a schematic block diagram of the organization of variable data fields for a plurality of bank accounts in a demand-deposit-account (DDA) master filed as employed in the system of Fig. 1A;

Fig. 5B is a schematic block diagram of the organization fields in DDA and record-keeping (RK) transaction files as employed in the system of Fig. 1A;

Fig. 5C is a schematic block diagram showing the organization of data fields in an RK master file as employed in the system of Fig. 1A;

Fig. 5D is a schematic block diagram of the organization of data fields in a portion of the file of Fig. 5C;

Fig. 5E is a schematic block diagram of the organization of data fields in another portion of the file of Fig. 5C;

Fig. 6 is a schematic block and flow diagram of a portion of the system of Fig. 3, for the master file maintenance run;

Fig. 7 is a schematic block and flow diagram of another portion of the system of Fig. 3, for the transaction file maintenance run;

Figs. 8A, B, C and D are schematic block and flow diagrams of another portion of the system of Fig. 3, for the transaction journal run;

Figs. 9A, B and C are schematic block and flow diagrams of another portion of the system of Fig. 3, for summary sheet run;

Fig. 10 is a face view of a printed transaction journal report form utilized in the transaction journal run;

Fig. 11 is a face view of a printed summary sheet report form utilized in the summary sheet run;

Fig. 12 is a modified form of summary sheet report form;

Fig. 13 is a top view with parts broken away of a check imprinting device for making machine-readable records directly on bank checks for use in this invention; and

Figs. 14A and B are, respectively, perspective and fragmentary front face views of a check-folder and imprinting device embodying this invention and for use in the system of Fig. 1A.

In the drawing, corresponding parts are referenced throughout by similar numerals.

In the system of Fig. 1A, a data processor (e.g. a stored-program digital computer) embodying this invention is employed. The computer may assume many different forms that are well known in the art. For example, it includes a memory 10 having a working storage section 11, an arithmetic unit or processor 12, and a control unit 14. Input devices are provided in the form of a reader device 16 which accepts machine-readable records 18 such as documents (e.g. bank checks and deposit slips) having special character formations. The reader 16 is a suitable document reader for reading prescribed character fields (imprinted on the documents 18 in magnetic ink or special optical type fonts, or presented in punch-card form). A document imprinter 19 is used to enter the prescribed fields on the checks or deposit slips 18 (e.g. it may be magnetic ink or special type font imprinter or a card punch).

Supplementing the memory 10 are various storage-filed devices such as a disc or drum memory or magnetic-tape stores. One set of filed devices takes the form of a set of tapes or discs 20 carrying the transaction, master-file and other data that are supplied to appropriate sections of memory 10 and are employed in the data processor. Another set 22 carries updated files corresponding to the files 20 after certain processing operations have been performed. Another set of files 24 supply control programs or runs to the memory 10 for directing various control operations in proper sequence. The machine may be one operating with binary coded electrical signals, with the signal combinations coded to represent alphabetic and numeric characters in accordance with any desired system. The files 20, 22, 24 con-

tain successive records having fields formed of such character signal combinations. Fixed or variable character lengths may be used for these fields.

An output unit 26 for producing printed records may take various forms that are available in the art. One suitable form is a high-speed printer, and a plurality of such printers may be used for concurrently handling different types of printed output forms. The overall control unit 14 for the data processor performs certain sequences of operation in accordance with the run of the control programs established in the memory 10, and effectuates control of the various portions of the system. In accordance with the operations to be performed in the system of Fig. 1A, the paths of information flow between the various sections of the system and the memory 10 are shown in full lines, while the paths of flow of control signals from the control unit 14 to the other portions of the system are shown in broken lines.

The system of Fig. 1A is illustrated further by the flow diagrams of Figs. 2 and 3. A plurality of ordinary bank checks 40, bank deposit slips 42, and other types of bank transaction slips 44 are currently handled in a manual fashion in present-day banking systems. Batches of such transactions 40, 42 and 44 are proved 45 (checked for accuracy) by an operator, such as the bank teller, and the various data sections thereof are placed in machine-readable form directly on the transaction slips by the imprinter 19. One form of well known device used for this purpose is a magnetic-ink imprinter customarily used by banks for ordinary processing of checks and the like.

A suitable form of check embodying this invention is shown in Fig. 4. This check may assume any of the customary printed formats for bank checks and, in addition, has a three-digit field 46 at a suitable location on the check (for example, just in front of the signature line thereof). This check, when it is employed with the well known form of magnetic-ink coding, receives a plurality of data fields along the lower edge thereof. One such field is the transit-number field 48 which carries the bank number and routing number for automatic

processing of the check in accordance with present-day systems. Another field 50 incorporates the account number (Acctno) of the customer on whose account the check is drawn. The fields 48 and 50 are customarily imprinted on bank checks prior to their being issued to the bank customer. Customarily, an amount field 52 is imprinted on the check at the time of proofing (45) by the imprinter 19 in the bank on which it is drawn (or at the clearing house) for automatic processing of the checks. In addition, a check number (Chkno) may be imprinted in the field 54 prior to issuance of the checks to the customer, or subsequently by the bank.

A two-digit transaction code (Tranco) field 56 is employed to identify the particular type of bank transaction represented by the instrument. That is, the code in field 56 indicates whether the document is a check, a deposit slip, or some other particular type of bank transaction. For checks, which represent the largest number of transactions, this code field 56 is often left blank. An additional field 56 carries the category number (Catno) inserted in the field 46 the writer of the check. This Catno is entered in field 58 either by the writer of the check (if he has an appropriate device for completing the machine-readable record in accordance with this invention) or by the bank on which the check is drawn or which operates the record-keeping system of this invention.

It has been found that a three-digit Catno is suitable for classifying the record-keeping categories in accounting systems employed by most individuals in their personal bank accounts, by most businesses and professional offices, and by most farmers. Such a three-digit Catno is able to provide a simple technique for the writer of checks to classify the RK category of the particular transaction, and similarly to classify the source of income represented by a bank deposit. In a very large number of instances, less than a hundred such categories are required to suitably classify a bank customer's individual "chart of accounts" (i. e. for each customer, his own list of Catnos, their descriptions, and record-keeping interrelationships). A three-digit code affords

the flexibility of separating large areas of records; e. g. categories in the 100 and 200 series may represent different classes of income, and categories in the 300 and 400 series may represent different classes of expenditures. Another example found suitable for family RK classifications is to use the 300 series for family income (both primary and secondary), the 400 series for fixed family expenses (e. g. rent or mortgage), the 500 series for variable family expenses (e. g. food), the 600 series for other income (e. g. dividends, loans), the 700 series for family asset expenses (e. g. investments). For agricultural accounts, it has been found suitable to use the 000 series for family records, the 100 and 200 series for various crops, the 300 and 400 series for livestock, the 500, 600, 700 and 800 series for other farm income and expenses, and the 900 series for capital improvements (e. g. buildings and equipment). For some applications, a two-digit Catno filed may be sufficient to meet the needs of a wide range of customers (this may be treated as a three-digit field, with the first digit handled as "0"). Moreover, the Catno field may be augmented by a fourth digit to afford the flexibility of a more detailed breakdown of any particular area in a customer's chart of accounts (preferably provision for a fourth digit is made in field 58, as indicated in Fig. 4). Such a breakdown may identify particular sales regions or customers for a particular business category, or particular models within a product line. Moreover, after a customer has developed and used his chart of accounts, he may readily modify any desired part thereof (as explained in more detail below) by adding or deleting various Catnos and by inserting (with the fourth digit) additional ones between two successive three-digit codes. Generally, in setting up a particular chart of accounts, certain Catnos in the sequence may be left unused (blank) and undefined so that the customer has the flexibility of using them at a later time as his record keeping changes. If desired, an alphabetic code may be used for the Catno, which may be easier for certain customers to use.

As is described hereinbelow, a bank customer, in accordance with this invention, is individually supplied with his own choice of a chart of accounts in which he selects his own Catnos and the descriptive titles associated therewith. Thereby, each check (Fig. 4) or corresponding deposit slip (which generally has the same format as that of Fig. 4, except that it has a different transaction code in field 56 and the transit field 48 may be omitted since it does not leave the bank) receives a Catno in the code field 46 (if a handwritten field is utilized) and in the machine-readable field 58 for automatic processing thereafter as machine-readable records.

In the system of Fig. 2, as indicated above, the processing operation 45 (which forms part of the initial processing known as the "entry run") completes the coding for the machine-readable fields of the checks 40 and deposit slips 42 if they have not previously been completed. The bank operator also develops a proof tape 60 with the dollar amounts of the batches of checks and deposit slips, and a proof tape 62 of the Catnos of all of the checks and deposit slips. The outputs of the processing operation 45 are the machine-encoded checks 40′, deposit slips 42′, and other transactions 44′ which are utilized, as machine-readable records, as inputs to the system of Fig. 1A as they are read by the document reader 16 in the machine operation 64 (Fig. 2).

In present-day automatic demand-deposit-account (DDA) banking systems in which automatic data processing is provided, the document reader 16 is controlled by an appropriate program to read the successive transaction records 40′, 42′, 44′ and assemble them as a daily transaction file (TRAFI) 70. Each transaction 71, 73 (Fig. 5B) of such a file in accordance with this invention contains data fields respectively representing the Acctno, Catno, Tranco, amount, Chkno, and the date associated with the transaction, as well as any other data desired to be carried along. The TRAFI 70 consists of such transaction records (TRAFR) 71, 73 assembled successively on an output file 22 as they are read by the document reader 16. The fields forming each TRAFR (and the other records of Fig. 5) are preferably located

at prescribed portions of the record, which has a fixed length, so that the desired fields may be readily located and processed in accordance with the known techniques. The TRAFI (Fig. 5B) ends with a special end-of-file record, in accordance with standard techniques, which follows the last TRAFR of the file; the other files are similarly constructed with suitable end-of-file records.

The operation of the computer (Fig. 1A) is under the control of a DDA Run of the control program which is stored in the memory 10 at this time. In one conventional form of such DDA run, the control 14 operates the processor 12 to produce an accumulated net total of all of the amounts in the transactions 40′, 42′, 44′ making up a particular batch and controls the memory 10 and output printer 26 to provide a proof listing 66 of all such amounts and the accumulated net total thereof. In accordance with the system of this invention, the DDA run is modified so that the control 14 similarly operates the system to produce a listing of all Catnos and an accumulated absolute total thereof. Thereafter, visual checks (or, if desired, automatic comparisons and checks if the contents of lists 60 and 62 are read into the machine) may be made of the corresponding totals provided by the proof listing of amounts 66 with the corresponding amounts of the proof tape 60 to check on the accuracy of the machine entry of the data. An additional such check is provided by the comparison of the Catno totals in the proof listing 68 with the corresponding total of the proof tape 62; thereby an improved accuracy check is provided.

In ordinary DDA processing, the daily TRAFI 70 is sorted into Acctno sequence; in this invention the Acctno field 50 and Catno field 58 are treated as one combined field, and the sorting in operation 72 is by both. The DDA Run controls the posting of the sorted TRAFRS to the DDA master balance file 75 as indicated by operation 74.

The format of the DDA master balance file 75 is shown in Fig. 5A, in which the sub-files 76, 77 making up each account are assembled in Acctno sequence and the data

fields that form each account's sub-file include successively those for Acctno (which may include the bank number where a central processor for several banks is used), the name and address of the bank customer, the account balance amount, an RK flag (if the account is to be processed in the record-keeping system), and one or more other fields for data such as service charges to the customer and bank statement cycle times. The DDA Run locates a particular sub-file 76 or 77 in the master balance file 75 corresponding to a TRAFR Acctno and posts the amount of the TRAFR to develop a new account balance in the corresponding field of that sub-file.

The output of the processing operation 74 is an updated DDA master balance file 78. Subsequent to the posting of each transaction, the RK flag field in that account's sub-file 76 or 77 is tested (80) to determine if it is an account that receives automatic record-keeping. If so, the particular TRAFR is also transferred to an RK TRAFI 82 that is built up for that day's transactions. The TRAFI 82 contains only those TRAFR 71, 73 for RK Acctnos, which are arranged sequentially on one of the output file devices 22. The DDA operation is completed for each account periodically in the usual fashion; i. e. on those days when bank statements are to be generated, the customary bank statement 85 is printed out (83) for each account, which statement carries the account balance as well as a listing of all of the transactions for the statement period. The transactions for each account during the bank statement period are indicated either in a cumulative transaction file (which is assembled on successive days by adding the current day's transaction file to the previous day's file) or by carrying the cumulative transactions in the DDA master balance file as a listing of transactions following the "other data" field. In this invention, an additional output file 87 is generated from the DDA processing 83; this file contains a series of records for the RK Acctnos. Each such record (148 in Fig. 5C) contains a "credit" field 150 (consisting of the total deposits on the monthly statement), a "debit" field 151 (consisting of the total checks) and a field 149 for a special identifier of that record.

These records are added to the RK master file, as explained below for Fig. 6, and for that purpose each record also contains a change-instruction field that is coded so that the record is added to the proper account sub-file of the RK master file.

The flow chart of Fig. 3 illustrates the processing of the RK data to printed RK reports that are sent to the bank customers and ordinarily with the usual bank statements. The daily RK TRAFI 82 developed from each day's transactions for the RK accounts is added to the RK TRAFI 84 (one of the files 20), which stores the accumulated transactions of previous days. The processing 86 updates file 84 by inserting the TRAFR of file 82 in the proper order by Acctno, Catno and date. The update processing 86 also serves to correct any errors that may exist in the TRAFI 84, and correction records 88 are also supplied to direct the desired changes in the TRAFI. The output of the processing 86 is the updated RK transaction file 92 (on one of the files 22), together with a printed list 90 of all of the new TRAFR supplied by the file 82 and all of the changes from the records 88.

An RK master file (MAFI) 94 (one of the files 20) is utilized which contains all of the required RK information about each RK account, including the customer's individual chart of accounts, as explained below. This MAFI 94 is maintained by update processing 96, which controls the performance of any changes, additions or deletions of entire accounts, or parts of accounts, that are specified by records 95. The output is an updated RK MAFI 98, as well as a list 97 of changes. The updated files 92 and 98 are the inputs to a transaction journal (Tr-Jrnl) Run 100. This run processes each account of MAFI 94 in the individual fashion determined by the customer's chart of accounts and in accordance with all of the customer's transactions for the particular statement period. The output is a printed transaction journal 102 for each account. Another input to this run 100 is a set of records 101 which determine the particular accounts to be processed on any given date (e. g. a particular sequence of account numbers may be set up to be processed at certain regular periods); also special re-

quests for reports of particular accounts can be made by any of these records 101. The input records 88, 95 and 101 may be stored on predetermined sections of one or more of the files 20; they may be punch-card records where appropriate for the computer hardware, or they may be entered manually via the computer console where few in number.

The Tr-Jrnl 102 contains a separate printed listing (see Fig. 10 for a pre-printed format) for each account of all of the transactions (checks and deposits) that were cleared during the cycle period. These are arranged in columns by Catno, Chkno, date, the amount, and the type of transaction, as well as by comments indicating the absence of a Catno (Non-Code) on the check or deposit slip, the use thereon of an invalid code in the customer's chart of accounts stored in the MAFI, or by the inconsistency of an income Catno being employed on a check or that of an expense Catno on a deposit slip, all is determined by the chart of accounts in MAFI 98. In addition, a sub-total for each Catno is indicated by "* * *" on the Tr-Jrnl.

The Tr-Jrnl Run 100 also flags all of the TRAFR of file 92 that it processes, and the flagged TRAFR are retained in case a re-run is required for a particular account. All of the TRAFR that were flagged on the previous cycle (i. e. those TRAFR in file 92 that contain flags and are presented as inputs to run 100) are not processed, but are conditioned to be dropped automatically by the subsequent Update TRAFI Run 86. Thus the output 104 from run 100 is a flagged and purged TRAFI, which is used as the input file 84 for the next TRAFI Update Run 86, as indicated by the connectors in Fig. 3.

The run 100 also augments all of the year-to-date (YTD) balances carried for each account in its sub-file of the RK MAFI 98 (as explained below for Fig. 5C). That is, as the run 100 develops the totals within each category which is utilized for the Tr-Jrnl, the corresponding totals on a YTD basis are augmented in MAFI 98. The output is MAFI 106, having the new YTD totals and also carrying the current cycle period's totals of trans-

actions for each Catno. Thus the MAFI 106 temporarily stores the current month's totals for each category, which are utilized in the next run 108 for processing the summary-sheet reports (Fig. 11 or 12).

The Summary Sheet Run 108 receives the MAFI file 106 as its input, as well as the cycle and request records 101. The Summary Sheet Run 108 produces as outputs, different summary sheets 110, 112 and 114 (in one form of the invention), which have somewhat different format characteristics to meet the special record-keeping needs of different classes of customers; that is, the summary sheets 110 are for personal bank accounts, sheets 112 for business accounts, and sheets 114 for agricultural accounts. A summary sheet format suitable for the personal and business accounts is illustrated in Fig. 11, and such a format suitable for agricultural accounts is illustrated in Fig. 12. However, these formats are not restricted to any particular type of account, and each customer's chart of accounts also specifies the particular format for his summary sheet, as explained below.

The summary sheet of Fig. 11 is simple in format, having a space 120 for printing the name and address of the customer and the Acctno, which data are obtained from the name record (described below) of the account's sub-file in MAFI 106, and a space 122 for the month and year, which information is obtained from the cycle record 101. The summary sheet of Fig. 11 is arranged with a plurality of columns having (in one form of the invention) pre-printed captions. The first column 124 contains the Catno, which the output printer inserts therein for each item of the customer's chart of accounts from MAFI 106, which also supplies the category description for that Catno to be imprinted in column 126. Columns 128 and 130, respectively, receive the printed amounts from MAFI 106 corresponding to the current-period's amount totals for a particular Catno and the YTD total. The run 108 does not modify the data of MAFI 106 and consists essentially of a print-out of the MAFI for the particular account (modifications of this run are described hereinafter). After the run 108, MAFI

106 is subsequently utilized as the file 94 for the input of the next MAFI Change Run 96. In other forms of the invention, the summary sheet is not arranged with preprinted captions, but instead the columns and captions are arranged in accordance with the customer's individual chart of accounts on the Summary Sheet Run. Likewise, the Jrnl format (Fig. 10) may have the captions inserted by the Jrnl Run 100 instead of being pre-printed. Thereby, a standard blank report form may be used for each type of report, with the differences being composed by the runs themselves.

The various portions of the RK Runs shown in Fig. 3 are described hereinafter in some detail. These runs refer to the file formats which are described with respect to Fig. 3.

FILE FORMATS. DDA Master File. As described above, a standard DDA file 75 (Fig. 5A) provides a sub-file 76, 77 (or set of data) for each demand-deposit account, with the sub-files for all of the accounts being arranged in a certain sequence such as an ascending Acctno order. The DDA master file, in accordance with this invention, has a specified field provided for the RK flag. This field may consist of a single bit that identifies whether the account is one to be processed by the RK system or not. Alternatively, different classifications of RK processing may be provided by using more than one bit; e. g. three RK flags may be provided corresponding respectively to three classes of record-keeping for agricultural, business and personal bank accounts, where separate daily TRAFIS 84 are to be set up for each class of accounts.

Transaction File. The transaction files (Fig. 5B) are each made up of a sub-file 71, 73 of records carrying the data of the various transactions, as described above.

Record-Keeping Master File. Fig. 5C illustrates the format of the RK MAFI, which is made up of a series of sub-files 140 for each account number, with these sub-files following one after the other and arranged in ascending numeric order. Within each account sub-file, a number of records are set up in a prescribed order; each record is assumed (in this embodiment) to be of a pre-

scribed length, and contains various fields at prescribed locations. The first record is a name record 142 for the particular account, and it carries ordered fields 143, 144 for the Acctno and the name and address of the customer, a field 145 (usually the initial field) identifying the record as a name record, a system-flag field 146 defining the particular classification of account (e. g. business, personal or agricultural), a cycle flag 147 which identifies by a code the time periods in which the account is to be ultimately processed to a customer report, as well as flags that define the accounting time periods for zeroing YTD totals (e. g. the fiscal-year month). A second record 148 has an identifier field 149 and net-credit and net-debit fields 150, 151 which are used ultimately for proofing the Jrnl totals against the DDA balance (these records are obtained from file 87, Fig. 2). The remaining records are each associated with a different Catno and together they make up the customer's individual chart of accounts. These records are of two types: one is a title (or title and total) record 160 (Fig. 5D), the other a year-to-date (YTD) record 162 (Fig. 5E). Each record 162 contains the titles for its Catnos, as well as the associated numeric amount totals on which the RK reporting is based. This series of records, which may be selected and varied in any desired fashion, incorporates the individual chart of accounts provided for each customer. Certain sections of the chart of accounts may be the same for a number of customers (e. g. income and, expense sections for the business type of records) and, as described below, variations are also provided for. Generally, each record is formed with a certain basic character length (e. g. that of a standard punch card), and certain records (e. g. that of the name record 142) are formed of a multpile of the basic length. The title and YTD records 160 and 162 each have the Catno and other fields at specified locations.

In Fig. 5C, the chart of accounts section of each account sub-file 140 is shown divided into a number of records which are initiated by a "General Title" record 152 which carries the alphabetic Catno. As shown in Fig. 5D, title records 160 have an initial identifier field

164 specifying the type of record and the type of totalizing operation to be performed, if any; thereafter, a title description and Catno fields 165 and 166.

Following a first "General Title" are a plurality of YTD records 153, 154. As many of these are provided as may be required for the customer's chart of accounts. As shown in Fig. 5E, each YTD record contains an initial identifier 167 followed by fields 168 and 168′ in which the numeric totals for YTD and current month, respectively, are accumulated for the associated Catno, where the latter is an expense item. Similarly, fields 169 and 169′ store totals for the same Catno where the latter is an income item. Flags 170 and 171 specify respectively whether either or both of the fields 168 (168′) and 169 (169′) are active for the particular Catno. That is, the flags 170 and 171 are provided depending on whether the chart of accounts follows the form shown in Fig. 11 or 12 (namely, depending on whether the Catno applies to either expense or to income, or to both, respectively). Following a first series of YTD records 153, 154 is a Level-I total (i. e. a sub-total) record 155 (of the type shown in Fig. 5D). This record contains an operator field 164 that specifies the particular control operations to be performed in the Summary Run 108. Successive such sub-file sections are provided as may be required for individual accounts (each including a group of records such as 152, 153, 154, 155), and a final Level-II total field 157 is provided where an accumulated grand or net total is stored; its operator field 164 is coded to specify the particular Level-II totalizing to be performed. Each total record 155 or 157 operates with all of the category data set forth in the preceding records up to any preceding total record of the same or higher level. As shown in Fig. 5C, only two levels of totalizing are illustrated (those of records 155 and 157). This invention contemplates the use of as many such levels as may be required for any particular account. The identifier 164 is coded to specify at which particular level the total is taken.

The working storage section 11 of memory 10 is shown in Fig. 1B. For many of the runs, two input files 20′ and 20″ are used with two associated output files 22′ and

22″, respectively. Each record from the Input-I file 20′ is transferred to an associated input register 180, from whence it is transferred to the output register 182 and therefrom the Output-I file 22′. Similarly, input and output registers 184 and 186 operate with Input-II and Output-II files 20″ and 22″. Various other storage registers are identified hereinafter in connection with the associated runs.

Master-File Change Run (Fig. 6). The inputs to this portion (run) of the system are (1) the RK MAFI 94 (Fig. 3), if one already exists, and (2) a maintenance or change file (CHFI) 95, which may be a set of records (e. g. punch cards, magnetic tape, or disc file) that set forth the changes and additions to be made to the master file. Each record of the CHFI 95 is identified by a field containing the associated Acctno, and all of these records are sorted in ascending order, as are those of MAFI 94. Four types of CHFI records are provided (in this embodiment) which are similar in format to the corresponding MAFI records (Figs. 5C, D and E), and carry certain modifications as noted (the reference numerals of the corresponding MAFI fields are referred to for identifying the CHFI fields):

(1) A CHFI name record carries any changes in the customer's name and address 144 and system and cycle flags 146 and 147 in a format similar to the MAFI record 142. The same special identifier field 145 is provided for this CHFI record. In addition, a predetermined change-instruction field carries a code that identifies either (a) delete a complete account, (b) add an entire new account, or (c) change the fields of the MAFI name record 142 to contain the data carried in the corresponding fields of the CHFI record.

(2) CHFI YTD records (similar to the MAFI record 162, Fig. 5E) have fields for the Catno and name, as well as for YTD expenses and YTD income; these CHFI YTD records carry a special identifier (i. e. the same as field 167) as well as a change-instruction field that identifies by code the type of maintenance operation to be performed (e. g. a code specifying a change of the entire

MAFI YTD record in accordance with the fields of this CHFI record). Another operational code may specify the deletion of the complete MAFI record corresponding to the Catno of the CHFI YTD record, or the addition of the entire CHFI YTD record. Another operational code may specify that one or more fields of a corresponding MAFI record should be changed in accordance with the data set forth in the corresponding CHFI fields (which may include an algebraic identifier for adding or subtracting dollar amounts).

(3) A CHFI title record (similar to MAFI record 160, Fig. 5D) carries a Catno and title description fields. The CHFI title record also has a field to provide a unique identifier corresponding to that of 164 in the MAFI records for general title, and Level-I and -II totals. A change-instruction field in the CHFI title record also determines whether the maintenance is to be a change in part of the MAFI title record, or an addition or deletion of the entire record.

(4) A CHFI record for net credit and net debit records carries a special identifier in field 149 and corresponding fields for credit and debit which are to replace the corresponding data fields 150 and 151 in the MAFI record.

Where the MAFI file does not exist, the CHFI contains all of the records required to compose the MAFI file. Where a new account is to be added, the CHFI file contains all of the records composing this new account and the change MAFI Run is designed to insert the successive records in the proper Acctno and Catno order in the MAFI file. If an entire account is to be deleted, the CHFI name record identifies this deletion and the run is designed to delete all of the records of that account subfile from the MAFI.

The MAFI 94 is set up as Input-II file 20″ (Fig. 1B) and the updated MAFI 98 is generated as Output-II file 22″. The CHFI file 95 is set up as Input-I file 20′, and no corresponding output file is generated. The CHFI file 95 (Fig. 3) is previously sorted in ascending Acctno order, and within each Acctno the records are sorted by identifier code numbers 145 and 149 to provide (a) a name record 142 and (b) a net cred-deb record 148, and there-

after (c) title and YTD records 152, 153, 154, 155, 157 are arranged in ascending Catno order.

In the flow charts (Figs. 6, 7, 8 and 9) standard symbols and representation are employed. Main control flow is represented by a rectangle for a processing operation, a trapazoid for processing that includes an input or output operation, and a hexagon for a predefined process such as a subroutine; a diamond is used for a decision or test with the main and branch flow paths indicated, and a subroutine may itself contain one or more decisions. Connector circles set forth the reference numerals of succeeding branch and main-flow operations. Generally, the flow paths are from top to bottom and from left to right; however, for simplicity of illustration minor variations therefrom are employed. The details and interrelationships of the operations are described in the specification with reference to the flow charts. The operations consist of basic machine operations or combinations thereof which are generally of an elementary nature, such as the basic arithmetic, comparison, code-recognition and input-output and transfer operations, and will be readily apparent to those skilled in the art.

Initially in this run (Fig. 6) the first operation 200 GETS a record CHFR from the CHFI file 20′ (Fig. 1B) and places it in working-storage input register 180 (Fig. 1B) in memory. Then test 202 determines if it is an end-of-change-file record (EOCHF) by looking for the associated identifier code at a prescribed field location). If NO, the next operation 204 GETS a record MAFR from the MAFI file 20″, places it in input register 184, and test 206 similarly determines if it is an end-of-file record (EOMF). If NO, test 208 determines whether the records are equal on control. This test 208 is composed of several tests, and initially determines whether the Acctnos for the two obtained records (CHFR and MAFR) are identical.

After equality of Acctno is determined, a test determines whether there is equality on the identifier 145 associated with name records 142. If not, a test is made to determine if there is equality on the cred-deb identifier 149; and if not, a test determines if there is equality

on Catno. Thus the tests 208 obtain equality on control for the CHFR and MAFR records by first obtaining equality on Acctno, and thereafter equality by testing the successive records as they would ordinarily exist within the master file. Test 208 proves YES whenever one of the additional subsidiary tests proves YES, and it proves NO whenever any test is NO.

Upon obtaining equality on control, the next test 210 determines whether the change-instruction field of the CHFR in register 180 calls for a "change". If YES, the appropriate fields of the MAFR in register 184 are changed (212) accordingly. A message print-out 214 identifies the change that was made; and the changed MAFR is PUT (216) on the updated MAFI 22″ in proper sequence (the PUT operation may vary for different computers; it is assumed, by way of example, that it consists of transferring the contents of output register 186, namely, the preceding record, to file 22″ and transferring the contents of register 184 to register 186).

The CHFR in register 180 is discarded after its change is made; i. e. the program returns to GET (200) the next CHFR without PUTTING the previous CHFR, so that the latter is written over in register 180. This loop is repeated, by GETTING the next CHFR and MAFR, since the preceding records of each were fully processed. This processing continues, and if the test 210 proves that the CHFR is not a "change", the next test 218 determines if its change-instruction field calls for the deletion of a record. If not, an error is indicated, since equality of control at test 208 requires either a change or a deletion, which error is handled by the print-out 220 of an error message. The unchanged MAFR in working storage 184 is PUT (216) to the updated MAFI, and the program returns to GET (200) the next CHFR. If the Delete test 218 proves YES, the program branches for a print-out 222 of a message identifying the deletion. Thereafter, the program returns to GET (200) the next CHFR and MAFR without a PUT to the updated MAFI; that is, the record is effectively deleted by its not being put out to the MAFI, and it is written over in register 184 by the

next MAFR. If desired, a single CHFR may be employed for deleting all of the records of a particular account. For this purpose, a special loop would be provided in the branch from test 218. In this loop (not shown) a first test would determine whether the deletion was of a single record or of the entire account. If a single record, then the operating 222 would be performed, as shown in Fig. 6. If the full account is to be deleted, a subsidiary loop proceeds to GET MAFR, then a test EOMF; and if NO, a test for equality on Acctno. If YES, the MAFR is deleted by printing a message and returning in the same loop to GET the next MAFR. This subsidiary loop continues iteratively until the test for equality on Acctno is NO. Thereupon, the loop exits to GET the next CHFR, testing for EOCHF, and returning to the main flow at the input to test 208.

If test 208 indicates that CHFR and MAFR are not equal on control, the program branches to test 224 in order to proceed with the control operations required to find the next such equality. Test 224 determines whether the CHFI record is higher in sequential record than the MAFR (the order, as noted above, being determined first by Acctno and thereafter by the identifiers 145 and 149 in the name and cred-deb records 142, 148, and subsequently by Catno. If the CHFR is high (and since the records are arranged in ascending order), test 224 indicates that no CHFI records exist calling for changes to be made in that particular MAFR; and it is PUT (226) to the updated MAFI unchanged, and the program returns to re-entry 204 to obtain the next MAFR. However, if the CHFR is not higher in sequence (test 224 is NO), then the CHFR in input register 180 should properly be a record to be added, since its sequence falls in place before the current MAFR. Therefore, the next test 228 checks the change-instruction code in the CHFR looking for an ADD; if it is not, the program branches to print out 230 for an error message and proceeds to GET (232) the next CHFR. The test 234 for EOCHF is again performed at this point; and if not the end-of-file, the program returns for the equality test 208 with the MAFR

that remained in register 184. If the ADD test 228 is YES, the proper fields of the CHFR then in register 180 are PUT (236) to the updated MAFI via output register 186, and an appropriate message is printed out (not shown). Thereafter, a GET 238 of the next CHFR is followed by a test 240 for EOCHF, and if NO, the program returns to the test 208 for equality.

The foregoing outlines the overall control program that produces the updated MAFI 98 in file 22″. Remaining are certain control operations that are performed when a test finds EOMF or EOCHF. Either of the latter can occur first, and the run terminates upon both occurring. When test 206 for EOMF is YES before that for EOCHF, the remaining CHFI records are those for new records for the last account and/or records for new accounts of higher account number; for this processing the program branches to test 242. The latter determines whether the CHFR is one to be added (which it should be except as an error); and, if not an ADD, the program branches to print out 244 for an appropriate error message. The program proceeds to GET (246) the next CHFR, performs the EOCHF test 248; and if NO, the program returns to ADD test 242. If the latter 242 finds an ADD record, that CHFR is PUT (250) to the updated MAFI file with a message print-out 252, and the next program steps to GET 246, and so on as described. These alternative loops are repeated until the EOCHF test 248 is YES, and the program branches to the end-of-the run process 254, which performs the particular housekeeping followed to wrap up this run and bring in the next one.

If the EOCHF test 202 is YES before that for EOMF, no further changes are to be made, and the program branches to GET (258) the next MAFR with a test 260 for EOMF. If the latter tests NO, the program returns to PUT (256) the MAFR and GET (258) the next one, and so on. In this way, the remaining MAFI records are successively GOTTEN and merely PUT to complete the updated MAFI until EOMF tests YES, and the run ends. Similarly, when test 240 is YES, the current MAFR in register 184 is PUT 256, and the run winds up as described.

In operation of the MAFI Run, test 208 determines if the correct MAFR is located to which a correction is to be made as specifically by the CHFR. Thereafter, tests 210 and 218 identify the character of the correction which is then carried out by the associated branches 212 and 222, respectively. If the CHFR does not call for a correction, test 208 is NO and the record should be an ADD, absent some error. The loop of test 224, PUT 226 and back via GET 204 locates the correct position in the MAFI sequence in which the CHFR is to be added, and when it is (absent an error), the CHFR is inserted by PUT 236. When EOMF occurs prior to EOCHF, the remaining CHFI records are added to the end of the MAFI via branch from test 206 to test 242 and PUT 250, and so on. When EOCHF occurs first, the remaining MAFI records are read out to the updated MAFI via a branch from test 202 or 234.

Transaction File Update and Change Run (Fig. 7). Processing 86 of TRAFI primarily calls for adding the new transactions of the daily TRAFI 82 (Fig. 3) to the accumulated TRAFI 84 of the previous days' operations. This operation can be considered to be a daily operation in which the new transactions are merged with those of TRAFI 84 in proper sequential order at the end of each day's DDA processing. Alternatively, the daily TRAFIS 82 for an entire statement period can be left unprocessed until the statement time, and then an overall sort performed on them. In actual operation, it is found generally desirable (where the work load warrants it) to perform this merging of each daily TRAFI with the accumulated TRAFI on a day-to-day basis. In addition, it is found that a certain amount of maintenance is required of the transaction file due to errors that may occur in the bank processing or due to customer errors. The TRAFI Update and Change Run described below assumes the latter type of situation where a day-to-day maintenance of the transaction files is desired in order to handle such error correction.

The TRAFI Run (Fig. 7) is substantially similar to the MAFI Change Run described above with respect to Fig. 6. The inputs to the TRAFI Run (as shown in

Fig. 3) are the RK TRAFI 84, which contains the accumulations of the transactions of previous days, the current daily TRAFI 82, which is presorted in ascending sequence order (at least by Acctno, Catno and date), and (as a prefatory addendum to TRAFI 82) the records 88 of changes to be made in the RK TRAFI. Each change to be made in file 84, in this embodiment, is represented by two change records 88; i. e. a record having a change-instruction field that calls for a deletion from file 84 of the entire identified transaction that is in error, followed by a record adding the entire transaction with the correct data.

For simplicity of illustration, the TRAFI Run of Fig. 7 omits certain portions of the run which are substantially the same as those described above with respect to Fig. 6. In Fig. 7, parts corresponding to those of Fig. 6 are referenced by similar numerals, with the addition of *a*. In reading Fig. 7 together with Fig. 6, references to "MAFR" are read as "TRAFR"; that is, for purposes of Fig. 7, the file being updated is the TRAFI (just as the MAFI is updated in Fig. 6). The change-file records (CHFR) of Fig. 7 are composed of the records 82 and 88 (Fig. 3) pre-sorted to be in proper sequence.

The TRAFI Run starts with GET 200a CHFR, a test 202a for end-of-file, GET 204a TRAFR, a test 206a for end-of-file, followed by a test 270 to determine whether the Acctno is blank (which condition comes about, as described below, when processed TRAFRS are flagged in the Jrnl Run, and then in a subsequent Jrnl Run their Acctno fields are blanked). If test 270 is YES, the program loops back to GET 204a the next TRAFR, without a PUT of the TRAFR with the blank Acctno, and thereby dropping it. If test 270 proves NO, the program then tests 272 to determine if the change record contains a Delete change-instruction field. If it does not, then it must be an ADD record (since only two types are used), and the program branches to test 224a to determine if the CHFR sequence order (Acctno, Catno and date) is greater than that of the TRAFR. If it is, the TRAFR is PUT 226a and the program returns to GET 204a the next TRAFR; and if it is not, the CHFR

must be an ADD, and it is PUT 236a. A message print-out (not shown) of the ADD record is performed, which is followed by GET 238a the next CHFR. Thereafter, the program proceeds to test 240a for EOCHF, and the program follows the corresponding operation described above for Fig. 6.

If test 272 finds a Delete record, test 274 then determines whether there is equality on control on a first set of criteria which are limited to the Acctno, the Catno and the date. If that equality is found, test 276 checks a second set of criteria for equality of control to locate the precise TRAFR identified in the Delete record; i. e. the criteria include the Chkno (the check or deposit number), the Tranco, and the amount of the transaction. If test 276 finds equality, a print-out 278 of a Delete message follows, and the program returns to GET 200a the next CHFR and GET 204a the next TRAFR without a PUT of the TRAFR or CHFR, and thereby deleting the TRAFR. If test 276 does not find equality, the TRAFR is PUT 280 and the program returns to GET 204a the next TRAFR. This control loop continues via equality tests 274 and 276 until the precise TRAFR to be deleted is located and effectively deleted via the path 278.

If the test for the first criteria proves NO, the program branches to test 282, which determines if the CHFR sequence order (Acctno, Catno and date) is greater than that of the TRAFR. If it is not, an error is indicated in the data of the CHFR, which error is identified by a print-out 284 of an error message, and the program continues to GET 238a the next CHFR. If the test 274 proves NO, and test 282 proves YES, the program branches to PUT 280 the TRAFR and returns to GET 204a the next TRAFR, and so on until test 274 is YES. If EOTRF test 206a is YES, the branch is to test 242a to determine if the CHFR currently in input register 180 is a DePete or an ADD. If a Delete, an error is indicated by a print-out 244a; otherwise, the program proceeds to PUT 250a the remaining CHFRS until test 248a finds EOCHF and the run ends (254a).

In other respects, the TRAFI Run (except in one respect noted hereinafter) is the same as the MAFI Run in the general control procedures to be followed. In the TRAFI Run, the special addition of handling blank Acctno fields is dealt with following each test for EOTRF (such as test 206a and that corresponding to test 260 in Fig. 6). This is done by performing a test similar to test 270 to determine if the TRAFR Acctno field is blank; if YES, the program loops back to GET the next TRAFR without a PUT of the current TRAFR and thereby dropping it. If the Acctno field is not blank, the loop back is PUT for the current TRAFR (which retains that record) and then GET the next TRAFR.

In operation of the TRAFI Run, test 272 distinguishes between the two types of CHFI records. In an ADD, the addition is made by locating the position in the TRAFI sequence in which the CHFR is to be added. This is done via the loop of test 224a, PUT 226a and back to GET 204a, and so on, until test 224a finds a TRAFR with the same or lower sequence order, at which the CHFR is PUT 236a. If the CHFR is a Delete, the correction is made by locating the precise TRAFR that is to be deleted. A first loop (tests 274 and 282, PUT 280, GET 204a, and so on) locates the section of the TRAFI having the same sequence order (Acctno, Catno and date). Thereafter, a second loop (test 276, PUT 280, GET 204a, and so on) locates the precise TRAFR (same Chkno, Tranco, and amount) and that TRAFR is dropped via path 278. The TRAFI Run also drops TRAFRS that have been previously processed in the Jrnl Run which results in a blanking of their Acctnos. Test 270 recognizes the blank Acctno and that TRAFR is dropped by the loop back to GET 204a without a preceeding PUT.

Transaction Journal Run (Fig. 8) The Jrnl Run 100 (Fig. 3) generates a printed report for each customer of his transactions for the reporting period. The inputs to this Jrnl Run are the updated RK MAFI 98 (used as Input-II file 20″ of Fig. 1B) and the updated RK TRAFI 92 (Input-I file 20′). The TRAFI is updated

and corrected by the TRAFI Run 86, so that all of the TRAFI records are in proper sequential order consistent with that of the MAFI. The updated MAFI 106 is put out to Output-II file 22″, and the processed TRAFI 104 to Output-I file 20′. Other inputs include a cycle-number record (CYC) 101 which sets forth the beginning and ending Acctnos to be processed by the Jrnl Run (these Acctnos are entered in the cycle working-storage register 190), and a set of special request records (REQ) 101 identifying particular Acctnos to be processed. The REQ Acctnos are presented in assending numeric order and may include Acctnos that are either within or outside the cycle range (these REQ Acctnos are established in storage register 192).

The printing of the Jrnl for a particular Acctno is controlled by the Acctno being specified by a REQ or by the Acctnos of the CYC. Thus, a Jrnl is printed where the MAFI and TRAFI records match on Acctno, and the Acctno matches either a CYC or a REQ. Where the Acctno of a MAFR matches the REQ or the CYC, but the TRAFI does not have the corresponding Acctno, the account is one in which there was no activity during the month, and the Jrnl Run prints out the Acctno and name data to indicate that that account was not skipped over by error. All of the TRAFRS that are processed are flagged, and any TRAFR that was flagged the previous month has its Acctno blanked so that there is no further processing of that record's data. The totals that are generated in the Jrnl report are Catno sub-totals for deposits and checks as well as the overall account totals for deposits and checks.

A flow chart of one form of Jrnl Run begins with certain control operations shown in Fig. 8A. It starts with GET 301 MAFR and GET 302 TRAFR. Test 303 determines if the TRAFR is an end-of-file record and, if so, the program branches to the EOTF subroutine 304 (Fig. 8B) at test 350. If not, the program proceeds to a predetermined process or subroutine 305, which incorporates a sequence of operations described in detail below (operations 444, 446 and 448 of Fig. 8C). That is, subroutine 305 tests to determine if the Acctno

of the TRAFR in register 180 is blank and, if so, it is PUT 306 (and not processed) and the program loops back to GET 302 the next TRAFR. A second test in subroutine 305 determines if the TRAFR was previously processed and flagged; if so, its Acctno is blanked, it is PUT 306, and the loop back GETS 302 the next TRAFR, and so on until subroutine 305 finds a TRAFR that is suitable for processing, whereupon the next steps are to GET 307 the CYC record (i. e. enter the range in register 190) and to GET 308 the next REQ record (i. e. enter it in register 192).

When the four different records have been set up in storage registers 180, 184, 190, 192, test 310 determines whether the REQ and MAFR are equal on Acctno. If YES, a REQ-reentry switch is set 312 and the program continues with a test 314 for equality on Acctno between MAFR and TRAFR. If Yes, the program exits to a subroutine 316 (Figs. 8C, D and E) that performs the processing of all the TRAFR and MAFR for that account, and thereafter reenters via test 318, which steers the program to the appropriate reentry point, depending on whether or not the REQ-switch had been set at operation 312. Thus, if test 318 proves YES, the exit to subroutine 316 was initiated by equality on REQ and the program returns to GET 308 the next REQ. In subroutine 316 (as explained, below) the processing of all the records for the current Acctno is completed, and initial MAFR and TRAFR for the next Acctno in each file are obtained before exiting.

If test 314 proves NO, the program branches to test 320 to determine if the TRAFR Acctno is higher than that of the MAFR. If YES, the program exits to subroutine 316 and the MAFR Acctno and name only are printed out (this situation arises when there was no activity in the account for that particular month. If test 310 proves NO, test 322 determines if the MAFR Acctno is high with respect to the REQ Acctno. If test 322 is YES, an invalid REQ is indicated and control branches to a print-out 323 of an error message, and the control returns to GET 308 the next REQ. However, if test 322 is NO, the MAFR Acctno must be low with respect to

that of the REQ, and thereafter a test 324 determines if the MAFR Acctno is equal to the current CYC (i. e. determines if it lies within the Acctno range of the current CYC). If YES, the branch goes to test 314 for comparison with the TRAFR Acctno and any processing that is required in subroutine 316. Upon leaving subroutine 316 under these circumstances, the result of test 318 is NO, and the reentry is to test 310, where the Acctno of the new MAFR obtained in subroutine 316 is first tested against the current REQ, and so on as described.

If test 324 proves NO, the test 326 determines if all the REQS and the CYC range have been processed (e. g. by testing a switch set at the end-of-request records, and by testing if the MAFR Acctno exceeds the upper bound of the CYC range). If YES, the branch is to wind-up 328 and thence to end-run 330. If test 326 is NO, the next Acctno is obtained from the MAFI file. That is, a loop is provided as follows: PUT 332 the MAFR, GET 334 the next one, test 336 for EOMF and, if NO, test 338 for the same MAFR Acctno, and if the latter is YES, the loop returns to entry 332. Test 338 may be performed by looking for the identification field 145 in the new MAFR which would indicate a name record 142 and therefore a new Acctno. Alternatively, each MAFR may have an additional field carrying the associated Acctno (which has been found desirable for greater reliability) and test 338 is there performed by comparing Acctnos in the input and output registers 184, 186.

If test 338 is NO, control returns to reentry 310 for a test against the current REQ Acctno. If test 336 is YES, control branches to wind-up 328. The wind-up 328 performs a number of operations to tie up certain loose ends that may remain; i. e. a test is made to determine if any REQ records remain unprocessed (which may arise due to an invalid Acctno having been utilized in the REQ record), and error messages are printed out. In addition, it is necessary to process any remaining TRAFR for the last Acctno that was being processed, which TRAFR may have invalid Catnos, and therefore they remain to be processed even though the MAFI for that Acctno has been completed. Thus the wind-up 328

processes all of the succeeding TRAFI records for the same Acctno, which operation terminates upon a new Acctno appearing for the TRAFI. Upon completion of the processing of all of the transactions for the last Acctno, the wind-up 328 completes whatever totals (such as the Catno totals and the final account total) that may remain, and it proofs these account totals of the Jrnl against the DDA balance, as explained below. When the last MAFI Acctno has been completely processed, the control steps to end-run 330 which completes the housekeeping operations on the various files to terminate the current run and bring in the next run.

When the program obtains a match of the MAFR Acctno and that of a REQ record (via test 310) or of the CYC range (via test 324), the program branches to test 314 to determine if there is also a match on the TRAFR Acctno. If not, test 320 determines if the TRAFR Acctno is greater than that of the MAFR. Test 320 proves NO where the TRAFRS for that TRAFI Acctno are not to be processed during the current CYC; e. g. the Acctno is outside the CYC range and is not one of the accounts specified by an REQ. Thereupon, the program proceeds with a loop to locate the TRAFR having the matching Acctno; this starts with a PUT 340 of the TRAFR, a GET 342 of the next TRAFR, a test 344 for end-of-file, the blank and flagged subroutine 305, and a test 346 to determine if the Acctno of the new TRAFR is the same as that of the preceding TRAFR (which is located in output register 182). If it is the same, a loop is formed back to PUT 340 to repeat the operation until test 346 locates a new TRAFI Acctno. When it does, the program loops back to test 314 to determine if there is now an Acctno match for MAFR and TRAFR. If there is not, the loop is again repeated until the match is found, or the TRAFR Acctno is greater than that of the MAFR, and the program then enters subroutine 316 to process the TRAFR and update the corresponding MAFR.

EOTF (MAFI Wind-Up, Fig. 8B). The EOTF subroutine is entered whenever the end of the TRAFI occurs. Initially, a test 350 determines if the Acctno

for the REQ record and MAFR are the same. If YES, the REQ switch is set 352 and program control continues (if the current MAFR is the name record 142) with the print-out 354 of the account name and Acctno, since this account receives a TR-Jrnl without any transactions for the CYC period. The program continues thereafter to wind up that MAFI account with PuT 356 the current MAFR and GET 358 the next one, which test 360 checks for end-of-file. If YES, test 357 determines if the account totals of the current Jrnl (the MAFR Acctno in output register 186) are in balance with the account's DDA balance (as explained below for test 460). If it is in balance, the subroutine exits to wind-up 328; if not, that exit is preceded by a print-out 359 of an error message.

If not EOMTF, test 362 determines if the Acctno remains the same. If it is the same, certain housekeeping operations have to be performed on YTD records, and test 364 determines if the current MAFR is a YTD type (from the identifier field 167). If it is not, the program loops back to PUT 356 the MAFR. If it is a YTD record, test 366 determines from the CYC flag 147 (stored in register 425 when the name record 142 is put out to file 22″, which register 425 is cleared upon a change in MAFI Acctno) whether the current CYC period is that for zeroing the YTD files, as explained below in connection with Figs. 8C and D. If it is the time to zero YTD, the program steps to operation 368, which performs the zeroing of the appropriate YTD field 168, 169 of the current MAFR and then steps to process 370 to zero the current-month field 168′, 169′ (which contains the previous month's figures) and the program loops back to PUT 356. If the current CYC period is not that for zeroing the YTD, from test 366 the program steps directly to process 370. This loop continues until test 362 indicates a different MAFI Acctno; the branch flow is via DDA-proof test 369 (and if NO, via print-out 371); if YES, to test 372 to determine whether the REQ switch is set. If NO, the branch is to test 350; if YES, the program proceeds to GET 374 the next REQ before going to test 350.

Whenever an end-of-file for the REQ record comes up, a switch (noted above for test 326) is set and the REQ Acctno in register 192 is set to the highest end of the CYC range. Thereby, when the program returns from operation 374 to test 350, the latter will prove NO because the REQ Acctno is necessarily greater than that of the MAFR. Thereafter, test 376 tests if the MAFR account numeral is higher than that of the REQ. If YES, an error-message print-out 378 is made, and the program proceeds via operation 374 to GET the next REQ, as described above. If test 376 proves NO, test 380 tests for equality of the MAFT Acctno and the CYC; if YES, the program branches to the loop beginning with print-out 354. If test 380 proves NO, test 382 determines if all the REQS and the CYC range have been processed. If YES, the program branches to wind-up 328; and if NO, the program branches to a loop that includes PUT 384 the current MAFR and GET 386 the next one, a test 388 for end-of-file, and a test 390 for same MAFR Acctno. If the Acctno is the same, the program loops back to PUT and GET MAFI records until a new Acctno is obtained, and the program then loops back to the beginning 350 of the subroutine. If test 388 is YES, the control branches to wind-up 328.

In operation, the Jrnl Run begins with obtaining an Acctno match between the name MAFR of an account and either the REQ or the CYC record (test 310 or 324). Thereafter, an Acctno match between the MAFR and TRAFR is obtained (or, if the account had no activity for that month, test 320 would find the MAFR Acctno greater than the TRAFR) and the program exits to subroutine 316 to process the MAFRS of that Acctno with the associated TRAFRS, if any. After this processing, control returns via switch test 318, which steers the control to different reenteries depending on whether the previous exit was due to an REQ or CYC match. If test 314 does not obtain an Acctno match for the MAFR and TRAFR, and the latter has the lower Acctno, the loop via PUT 340 through test 346 operates repeatedly to locate the required TRAFR Acctno. Similarly, if the MAFR Acctno does not match on REQ or

CYC, the loop of PUT 332 through test 338 obtains the next MAFI Acctno.

At the end of the TRAFI, after it has been processed, the program enters the EOTRF subroutine (Fig. 8B) to wind up the MAFI. If the current MAFR is the name record, a print-out 354 of the name data is made upon a match of the MAFR on the REQ or CYC (test 350 or 380). Thereafter, the loop of PUT 356 through operation 370 transfers the remaining MAFRS of that account to the update file with any processing that may be required such as the zeroing (368 and 370) of YTD and current-month totals. When the next Acctno is detected by test 362, the loop exits back to test 350 (via DDA proof test 369 for the Jrnl just completed and test 372). If there is no match on REQ or CYC, the loop (384-390) obtains the next MAFI Acctno. Finally, at the end of MAFI, the test 360 branches control (via DDA proof test 357 for the Jrnl just completed, or test 388 directly since there was no Jrnl then in process) to the TRAFI wind-up 328. If the MAFI should end before the TRAFI, the wind-up 328 processes the remaining TRAFRS for the last Acctno and completes the totals for the Jrnl therefor and proofs the totals with the DDA balance.

Processing TR-Jrnl. The processing of the TRAFI and MAFI files to produce the transaction journal (i.e. the subroutine 316, Fig. 8A) is illustrated in flow-chart form in Figs. 8C and D. In working storage 11, additional sets of registers are employed for this processing; namely, a YTD Cat-total register 400 having individual sections for income and expense (to store MAFR fields 169 and 168, respectively), a current-period Cat-total register 402 having individual income and expense sections (to store MAFR fields 169′ and 168′, respectively). Additional registers used for developing the summary sheet reports are Level-I total registers 404 and 405 for YTD current-period, respectively, and each having income and expense sections (as many such Level-I registers are provided as Level-I totals may occur in any particular chart of accounts; for example, several of these may occur in business accounts), and Level-II total registers 406 and 407

(for YTD and current-period, respectively, and each having income and expense sections) which accumulate the overall totals for each account. The Level-I and Level-II registers 404-407 operate only with the data reported in the summary sheet (Fig. 11), where the totals are those of validly coded items and not of invalid codes or non-coded items. Another register 408 contains the account total (Acct-tot) for the current period in income and expense and incorporates all items whether coded or not, validly or not.

The first operation 410 tests for equality of MAFR and TRAFR (since this subroutine may be entered from test 320 or test 314, Fig. 8A, and operates differently accordingly). If test 410 is YES, the name and address of the account from the name record 142 in input register 184 is set up, by print-out 412, on the blank transaction journal form (Fig. 10). Thereafter, the program proceeds to PUT 414 the current MAFR and GET 416 the next MAFR. The test 418 determines if this MAFR in register 184 is the end of file, and if not, test 420 determines if the new MAFR continues the same Acctno (i. e. determines if its identification field is other than that 145 for a name record). If YES, test 422 determines if the MAFR is a YTD record from identifier field 167, and if NO, the program loops back to PUT 414 and GET until a YTD record is obtained. (General-Title and Total Records 160 (Fig. 5D) are not utilized in this run.) When test 422 finds a YTD record, test 424 determines if this is the month to zero the YTD records (i. e. if it is the end of the fiscal accounting period as indicated by the cycle flags 147 for the current Acctno, which flags are stored in working register 425 after the name record 142 is put out to file 22′). If YES, the YTD fields 168, 169 of the MAFR in register 184 are zeroed 426 and the program proceeds to zero 428 the current-period fields 168′, 169′ in that same YTD record. If test 424 is NO, the program steps to operation 428 directly. If test 418 is YES, control branches to wind-up 328.

Thereafter, test 430 determines if the TRAFR and MAFR records are equal on Catno. If YES, test 432

determines if either MAFR flag 170 or 171 is set consistent with the Tranco. That is, the Tranco (check or deposit) of the TRAFR calls for a flat in MAFR field 170 or 171, and this test 432 determines if the flag is in that field of the MAFR. Thus, the test 432 determines whether the check writer has inserted a deposit Catno on a check or a check Catno on a deposit by error. If test 432 is YES (i. e. it finds that the flat corresponding to the Tranco is set, the program proceeds with print-out-436. The latter controls the print-out on the TR-Jrnl form (Fig. 10) of the current TRAFR; i. e. it prints out the TRAFR fields of the Catno, Chkno, the date, and the amount, and points the amount in the appropriate column depending on the Tranco indicating a check or a deposit. In addition, this control 436 initiates various accumulating operations in the working storage; that is, the amount field of the TRAFR is added to the previous YTD total (income or expense as is appropriate) for that Catno obtained from the MAFR record located in the input register, and the sum is stored in the appropriate income or expense section of register 400. The TRAFR amount is also accumulated in the appropriate income or expense section of register 402 with those of other TRAFRS of the same Catno. The Acct-tot register 408 is also incremented in its appropriate income or expense section by this transaction amount.

To complete the processing of the current TRAFR, and to identify it as processed, a flag is inserted in the FLG field 437 (Fig. 5B) of that record, and since it is now completely processed it is PUT 438 to the output file 22′. If test 432 is NO, an invalidly coded TRAFR is indicated by a print-out 434 of an error message to that effect on the TR-Jrnl (Fig. 10). In addition, the TRAFR data is printed out, as explained above, and the amount is accumulated only in register 408 since the Catno is invalid; a "processed" flag is inserted in FLG field 437, and the program steps to PUT 438, followed by GET 440.

After the next TRAFR is obtained, test 442 determines if it is the end-of-file. If YES, the subroutine exits to the EOTF subroutine (Fig. 8B) at entry point

356; since the current MAFR requires no further processing it is PUT 356; the next MAFR must be obtained and it and the rest of the MAFI processed. If test 442 is NO, test 444 determines if the Acctno field of the new TRAFR is blank (which field would have been blanked during the preceding month's Jrnl Run (see 448 below) if that TRAFR had been flagged the month prior to that. If test 444 is YES, the TRAFR is not a record to be processed and the program loops back to entry 438 to PUT and GET the next TRAFR. If test 444 is NO, test 446 determines if the TRAFR is flagged (in its FLG field 437), and if YES, control 448 proceeds to blank the Acctno field, and the program loops back to entry 438.

If test 446 is NO, test 450 determines if the current TRAFR is continuing with the same Acctno (i. e. whether it has the same Acctno as that in the TRAFR output register 182). If YES, test 452 determines if the same Catno is continued, and if YES, the program returns to test 432 to determine if it is a valid Catno for the Tranco and to process it accordingly. If test 452 is NO, a number of processing operations 454 are handled. That is, the Cat-totals in register 402 are printed out in the next line of the TR-Jrnl and marked as a total (e. g. with the three asterisks representing such a total in Fig. 10); the totals in registers 400 and 402 are also transferred to the corresponding fields of the MAFR input register, and then registers 400 and 402 are blanked. Thereafter, the program returns to entry 414 to PUT the current MAFR and GET the next one, and to repeat the above described loop.

When test 450 detects a change in the Acctno of the TRAFI record, the program branches to control 456 (Fig. 8D) to perform the same operations as those of process 454, and thereafter, in control 458, the Acct-tot in register 408 is printed out on the TR-Jrnl report. Then test 460 determines if that Acct-tot of the current TR-Jrnl is the same as the current-period totals of the DDA bank statement of the same Acctno. This operation is performed by comparing the contents of register 408 with those of the debit-credit working register 401 (to

which are transferred the fields 150 and 151 of record 148, Fig. 5C, for the same Acctno prior to that record having been PUT 414). This comparison may be performed by subtracting the contents of register 401 from those of register 408 and checking for a zero balance. If test 460 is NO, there is an error-message print-out 461, and at the same time the register 408 is blanked since it is not zero, and the program steps to subroutine 462. If test 460 is YES, the program steps directly to subroutine 462.

The control operations of subroutine 462 correspond generally to those described above and identified as 414 through 428, except that the subroutine 462 is performed at the termination of the TRAFRS for the Jrnl currently being processed, and it is only necessary to wind up the MAFRS of this Acctno. At this time, the MAFR records for the current Jrnl's Acctno are all processed in the same fashion to zero YTD records if it is the end of the fiscal period, and to zero all of the current-period fields in those records (since these fields correspond to the preceding month's sub-totals). When the test for same Acctno (corresponding to test 420) detects a change in Acctno in the MAFR, a branch exits from the subroutine 462 and back to test 318, Fig. 8A (as indicated by the connector circle). The branch from the test for a YTD record (corresponding to test 422) is a return loop to the beginning of the subroutine, as is the step from the operation of zeroing the previous current-period field (corresponding to control 428), and the latter loop back is indicated by the connecting line in the drawing.

When test 430 finds inequality of the Catnos for the TRAFR and the MAFR, the program branches to test 478 (Fig. 8D) to determine if the Catno for the TRAFR is greater than that for the MAFR. If YES, there are no current transactions for that MAFR and the program branches back to the entry 414 to PUT the current MAFR and GET the next one. This loop continues until test 430 finds equality, or until test 478 finds that the Catno of the current TRAFR is less than that of the new MAFR. Thus, when test 478 is NO,

an invalid Catno in the current TRAFR is indicated, and the program steps to print-out 480 (which is similar to control 434) to print the TRAFR data on the current Jrnl and to mark it as an invalid Catno, and to handle that TRAFR as described above for control 434. Thereafter, a predefined process or subroutine 482 establishes program control. It is made up of operations which are similar to the operations 438 through 450, except that the subroutine 482 is concerned with handling invalid Catnos and with completing the processing of them until a new Acctno is obtained, which provides an exit for the loop in which the program is operating, to control 456. If the Acctno is the same, subroutine 482 exits to test 452′, which (like test 452) determines if the Catno is the same; if YES, the control loops back to print-out 480 for another invalid Catno; if NO, print-out 454′ (like 454) completes the operations for the previous TRAFR, and control returns to test 430 to determine if the Catno of the new TRAFR is valid.

When test 420 is NO (i. e. the new MAFR contains a change in Acctno), the program branches to test 484, which determines if the Acctno for the input TRAFR is the same as that of the previous MAFR (which now has been PUT and therefore lies in the MAFR output register 186). If test 484 is NO, the program branches to subroutine 486, made up of operations which are generally the same as the operations 456, 458, 460 and 461. That is, subroutine 486 performs the remaining operations that are necessary to complete the printing of the current Jrnl, and to blank the appropriate working registers. In subroutine 486, the test corresponding to test 460 checks to determine whether the Acct-tots (register 408) for the TR-Jrnl are in balance with those of the DDA bank statement (fields 150, 151), and if YES, the overall processing subroutine 316 in Fig. 8A (of which subroutine 486 is a part) exits and returns to the initial control section of the program at test 318. The same exit to test 318 occurs following the printing of an error message corresponding to control 461.

If test 484 proves YES (i. e. the Acctno of the input TRAFR is the same as that of the previous MAFR), the program steps to 488 to print the data of that TRAFR on the current Jrnl and to mark it as invalid, to accumlate it in the Acct-tot register 408, and to flag it as "processed." Thereafter, the program moves into subroutine 490 (which is generally similar to subroutine 482, employing operations similar to 438 through 450); its function is to complete the handling of all of the remaining transactions having the same Acctno as that of the previous MAFR (i. e. the current Jrnl) and to complete that processing. The subroutine is a self-contained loop from which the exits are either via the EOTRF test (to subroutine EOTRF 350, Fig. 8A) or via the test finding a different Acctno in the TRAFR, which calls for an exit to test 318.

If test 410 is NO (corresponding to an entry from test 320), there are no TRAFRS for that MAFI Acctno during the current period. Print-out 492 prints the name and address, and control steps to test 460 to check the zero Acct-tot against th DDA bank statement.

In operation, the processing of the TR-Jrnl starts with a print-out 412 (Fig. 8C) of the account name and address from the name MAFR 142. Thereafter, loop 414-422 obtains the next YTD MAFR for the same Acctno, and the appropriate fields thereof (at least the current-period fields 168′, 169′) are zeroed. A match between MAFR and TRAFR is obtained (test 430), the TRAFR Catno is checked (test 432) for valid code, print-out 436 sets up the TRAFR data for a valid Catno on the Jrnl (print-out 434 for an invalid Catno), and Acct-tot register 408 is accumulated by the TRAFR amount, as well as the registers 400, 402 for a valid Catno. Thereafter, loop 438-448 obtains the next TRAFR to be processed (i. e. not previously processed and therefore not flagged and Acctno not blanked), and if the same Acctno and Catno, there is a loop back via tests 450, 452 and 432 to repeat the processing (print-out 436 or 434) on the TRAFR data, and so on. Where the next TRAFR has a different Catno, print-out 454 steps up the Cat-total on the Jrnl, the totals in registers 400, 402 are placed

in the corresponding MAFR fields, and these registers are blanked. Thereupon, the control loops back to PUT 414 to GET the next MAFR, if any, for this Acctno, and repeats the processing for the current TRAFR which does have the same Acctno (as established by test 450). Where all of the TRAFRS of the Acctno have been processed, control branches (from test 450) to print-out 456, which performs the Cat-total operations. Thereafter, print-out 458 prints the Acct-tot from register 408, which totals are used to proof (test 460) the totals of the DDA bank statement for the same current period, and subroutine 462 winds up the MAFRS, if any, for the Acctno of the Jrnl just completed. When there is no match on Catnos (test 430), test 478 determines if there are no TRAFRS for the MAFR Catno, or if the TRAFR Catno is invalid. If the latter, loop 480, 482, 452 processes the successive TRAFRS with invalid Catnos until the next Catno is found. Similarly, where the MAFRS terminate for a particular Acctno (test 420) and TRAFRS remain for that Acctno, the latter have invalid Catnos and loop 484-490 processes them.

Summary Sheet Run. The Summary Run 108 makes use of the MAFI 106 as updated by the Jrnl Run 100. There is no further updating of the MAFI, so there are no file outputs in this run 108, and the outputs are the printed summary sheets (Fig. 11 or 12) that present the record-keeping data and analysis developed from the customer's transactions and chart of accounts. The TRAFI is not required in this run, since all of its data has been extracted during the Jrnl Run and utilized to update the MAFI.

Different forms of summary sheets (e. g. those of Figs. 11 and 12) are utilized, depending upon the character of the account; for example, a personal account will generally require a simpler form of record-keeping and a business or professional account a more elaborate form of record-keeping and analysis. It has been found that agricultural accounts have special characteristics which may call for a somewhat different form of summary sheet, such as that of Fig. 12. In this format, the same Catno may be used for both expenses and income.

An example of this is in crops, or any particular variety thereof, where the farmer's record-keeping is more helpfully presented to him if he can identify both his expenses and his income in connection with the same crop activity. Thus the use of the same Catno for both has been found to be helpful. This form of summary sheet (Fig. 12) can also be used for personal and business accounts if desired.

In a personal account, it has been found to be sufficient to provide two general areas of record-keeping, namely, one for income and the other for expenses, with individual totals for each area. If a customer desires, the income can be broken up into more than one level (e. g. taxable and non-taxable income) with totals provided for each, as well as an overall income total. Similarly, the expenses can be broken up (e. g. deductible and non-deductible), with Level-I totals, as well as the overall Level-II total therefor. In a business type of account, for example, a format may consist of an area for income with a Level-I total, an area for cost of income with a Level-I total therefor, and a Level-II total in the form of "Gross Profit" consisting of the difference therebetween, with the foregoing followed by another area for Overhead Expenses with a Level-I total therefor, followed by another Level-II total in the form of Net Profit or Loss, representing the difference between the first Level-I total and the total of overhead expenses. Various other formats of business record-keeping summary sheets may be employed, and with the transaction data supplied and the chart of accounts in the system of this invention, a balance sheet summary may be provided.

For purposes of distinguishing between the different classifications or types of account, the name record 142 and each account's master sub-file 140 (Fig. 5C) contains a system-flag field 146 which identifies the type number of the account. In performing the summary run it may be restricted at any time to a single type of summary sheet format (e. g. personal, business or agricultural, Fig. 11 or 12) since, for efficiency and reasons of cost, only a single output printer may be available. For this reason, the cycle record specifying the account

numbers to be processed at any time would specify the particular account type number (Typno) to be handled during a run. This typno is stored in a working register 500. Alternatively, a console entry or punch card may be used to establish the Typno to which the run is to be restricted at the time that the operator sets up the particular summary sheet to be run through the printer.

The same cycle range 101 and the same requests that determined the Jrnl-Run processing are employed in overall control of the Summary Run, and the Acctnos of the cycle range and the requests are established in the working registers 190 and 192. The Summary Run starts with GET 502 the MAFR, and thereafter proceeds with GET 507 the cycle record, and GET 508 the request record to establish the latter in registers 190 and 192. The input control section of the Summary Run, made up of operations 507-512 and 522-526, is generally the same as the corresponding input control operations of the Jrnl Run (Fig. 8A) and are referenced by the same numerals except that in the Summary Run they are in the 500-series while in the Jrnl Run they are in the 300-series. Details of the operation of these portions of the Summary Run will be readily understood from the corresponding description of Fig. 8A.

When test 510 finds equality of the MAFR with that of the REQ record, the REQ switch is set 512; thereafter (or after test 524 finds the Acctno within the CYC range), the program proceeds with test 528. The latter determines if the system flag in field 146 of that MAFR is the same as the preset Typno stored in register 500. If test 528 is NO, test 530 checks the setting of the REQ switch, and if it is set, an error-message printout 532 indicates that the Acctno of the REQ card did not have the proper system flag. Thereafter the program returns to perform the operation to GET 508 the next REQ record, and the process is repeated. If test 530 is NO (the Acctno is within the CYC range, but it is not the type of account (Typno) requested in register 500), the program branches to loop 548 (GET 550, EMOF test 552 and same-Acctno test 554) to find the next MAFI Acctno.

If test 528 finds the proper system flag corresponding to the Typno, set 534 determines if the Typno corresponds to a business account. If YES, the program branches to the subroutine 536 for processing business summary sheets. If test 534 is NO, a test 538 determines if the Typno is for personal summary sheets. If YES, the program branches to subroutine 540 to process the records for the personal summary sheet. If test 538 is NO, the program proceeds with subroutine 542 to process the agricultural type of summary sheet. All of the subroutines 536, 540 and 542 exit to test 544 to determine whether the processing had originated from a REQ record or the CYC range, and the program returns to re-entry points 510 or 508 accordingly.

If test 526 determines that all of the Acctnos specified by the REQ and CYC records have been processed, the program proceeds to the end run 546; its operations consist of the usual wrap-up housekeeping together with printing out any REQ records that remained unprocessed upon coming to the end of the MAFI (such requests necessarily being invalid). If test 526 is NO, the program enters the loop 548 to GET a new MAFI Acctno. That is, loop 548 is entered under conditions of the current Acctno not being within the CYC range nor specified by a REQ, and it is necessary to run through the MAFR of the current Acctno until test 554 finds that the next one is obtained, and the loop exits with control returning to test 510.

The subroutine 540 for processing personal summary sheets is shown in Fig. 9B. It is assumed that the RK summary statement may take the form shown in Fig. 11, in which the amount data are to be supplied, but not percentage data (the latter is described with reference to Fig. 9C). The initial operation 556 consists of printing on the summary sheet 110, in the appropriate areas 120, 122, the name and address together with the Acctno, the month and year of the period for the summary sheet, and any other required data that may not be supplied by the name record 142 then currently in the MAFR input register 184. Thereafter, GET 558 brings the next MAFR into the input register 184, which record

is the cred-deb record 148. This record is handled by a loop 559 that includes the series of record-identifying tests 560 through 570, and it fails all of these tests (except same-Acctno test 562, which it passes), and the branch from the last test 570 returns the loop to GET 558, whereby the next MAFR is obtained. Generally speaking, this next record is a General-Title record 152 which passes tests 562 and 566 (and fails the tests 560 and 564), and the program branches to a print-out 572 of the title record portion 165 (i. e. the Catno and description, such as "100-Income" shown in the first row of Fig. 11 in columns 124 and 126. Thereafter, control returns to GET 558 the next MAFR. This next record is usually a YTD record 153, which is identified as such in test 564, from which the program branches to control 574 to accumulate the YTD amount of this record in register 404 and in the income or expense section thereof, depending on the identifying flags in fields 170 and 171 of the YTD record (if the Fig. 12 format of summary sheet is used, the YTD MAFR may contain both income and expense amounts, both fields 170 and 171 would have flags, and both sections of register 404 would accumulate the corresponding amounts from fields 169 and 168). Likewise, the current-month amount of the YTD record is accumulated in register 405 and in the corresponding income and/or expense section thereof. In addition, the accumulation takes place in the Level-II registers 406 and 407 in the same fashion as that described for the Level-I registers. By way of example, the Level-I registers 404 and 405 may initially accumulate taxable income and thereafter non-taxable income and, subsequently, deductible and non-deductible expenses, while the Level-II registers 406 and 407 accumulate total income and, subsequently, total expenses. Print-out 574 also calls for the printing of this YTD record; the title name or description 163 is printed in column 126, together with the Catno field 161, and the current-month amount and YTD amount fields 168, 168′ (or 169, 169′) are printed in the appropriate columns 128 and 130. All of the data to be printed out comes from certain specified fields of the YTD record and go to

specified locations on the summary sheet, so that routine procedures may be used to perform the print-out 574. Thereafter, the program returns to GET 558 the next MAFR, which may be a second YTD record 154, and the processing thereof is similar to that described.

After a first group of YTD records are processed, a Level-I total record 155 may be the next MAFR in input register 184, and this record is detected by test 568 and the program branches to print-out 576. Here the contents of the record are printed out. That is, the Catno 166 and title name 165 retained in this record (Fig. 5D) are printed out as well as the contents of the corresponding portions of working registers 404 and 405. In order to determine which section (income or expense) of each register 404 or 405 is to be printed out, a simple procedure may be employed; the income section of each is tested for All-Zeros, and if not such the income section is printed out, but if it is All-Zeros, the expense section is printed out. The control 576 thereafter blanks the Level-I registers 404 and 405 and the program returns to GET 558 for the next MAFR. In a similar fashion, a new section of the summary statement may start with a General-Title Record (corresponding, for example, to "120-Expenses" in Fig. 11) and the program operates in the manner described to print out this Catno and title and to process the succeeding YTD records. Thereafter, an additional Level-I total may be provided and processed in the manner described.

Where a Level-II total record 157 is provided in the chart of accounts, this record is identified in test 570 and is processed by control 578. The latter prints out the Catno and title-name of the Level-II total record, as well as the contents of the Level-II working registers 406 and 407 (in a manner similar to that described above for the Level-I print-out), and the contents of the Level-I and Level-II registers are blanked. The program returns to GET 558 the next MAFR, which may be a new Acctno record that is identified by test 562, from which the program branches to control 580 for blanking all totalizing registers 404-407 in order to ensure that they are in that condition with the termination

of the summary statement for the previous Acctno, and the program returns to test 544 (Fig. 9A) which leads to the proper re-entry for the input control section of this run. After all of the MAFI has been processed, test 560 detects the end-of-file record and the program returns to end run 546 for the wrap-up.

In operation, the Summary Run provides a complete record-keeping report in accordance with the customer's own individual charts of accounts, which controls the generation of the customer's summary report on a form that is blank except, for example, for the captions of the columns and a suitable heading. The customer's own master sub-file (his chart of accounts) determines the record-keeping system, and the format and descriptive titles on the summary sheet. The Summary Run operates to print reports that may be different for each customer. The master sub-file controls the operation of the run in that the latter comprises a series of tests for recognizing the different types of MAFRS (YTD, title or total records) and a set of controls associated with each test for producing the appropriate print-out, register accumulation and totalizing. The customer's title records 160 are selected and serve to provide headings for different sections of the report and are used to label the particular record-keeping system chosen by the customer. The customer's total records 155 or 157 are selected and serve to complete the definition of the customer's record-keeping system; these records initiate different types of totalizing control operations built into the Summary Run to report the customer-selected totals at the required levels. The YTD records supply category sub-totals, which were accumulated in the Summary Run and are printed out in the Summary Run at the same time that they are further accumulated for the totals at different summary levels. Thus, the mechanization of this system makes it possible for each customer to select his own chart of accounts of categories, of a record-keeping system and of report captions. This selection consists essentially of identifying his own areas of financial activity and describing them himself for the category breakdown and names, or of choosing categories

and names from a list that may be composed for his convenience. The particular record-keeping system to be used for the reports may also be individually selected. Thereafter, the customer merely categorizes each transaction in accordance with his own chart, and he may revise any part of that chart whenever he desires. The actual summary report may be generated on a largely-blank form and compactly and individually reports the customer's financial transactions.

The subroutine 542 for the agricultural summary sheets is generally the same as that described for the personal summary sheets (Fig. 9B), with certain minor modifications. For example, the summary sheet format found most useful for the agricultural report is of the type shown in Fig. 12, wherein both expenses and income can be applied to the same Catno. In this case, the fields 168, 169 (168′, 169′) both carry category totals, and the accumulation controls 574, 576 for these YTD records are directed to both the income and expense sections of the Level-I and Level-II registers 404-407, rather than in just one section as described above for the personal summary sheet. In this system, a farmer may select his own chart of accounts, and the report print-out is composed accordingly on largely-blank forms.

In connection with business reports, more detailed accounting analysis is generally desired, and this analysis may all be supplied with the MAFI chart of accounts of any business and with the Catno data supplied with the original transactions of the business. By way of example, the processing subroutine 536 for business summary sheets may take the form shown in Fig. 9C, where parts corresponding to those described with respect to 9B are referenced by the same numerals, with the addition of a prime. Initially, print-out 556′ sets up (as described above for Fig. 9B) the name and address of the account on the summary sheet (of the type illustrated in Fig. 11, in which the percentage columns 582 and 584 for current month and YTD are employed. The next control 590 consists of saving the file address in file 20″ of the start of the master sub-file for the current Acctno. This address is then available, since it corresponds to the

beginning of the current name record then in the input register 184 (and can be obtained from the computer's file address register, knowing the size of the block of data read into the MAFR input register 184). This STRT-ACCT is inserted in a working register 592.

The next control 594 GETS the next MAFR, which is the cred-deb record 148, identified as such in test 600, and since it is not used here, the program then loops back to GET 594, the next MAFR. This record will usually be a title record 152, and is recognized again as such by test 600 when the program loops back again to GET 594 the next MAFR. This MAFR ordinarily will be a YTD Catno for income, which will be recognized as such by test 602, and the program passes to control 604 to accumulate the YTD and current-period income amounts in an additional register 606, similar to the Level-I and Level-II registers, and used for accumulating the total income for valid Catno items, and as a base for computing percentages for the remainder of the account. Any other base may be accumulated for this purpose; it has been found that this total of income is one which has broad acceptance and meets the needs of many customers. The customer's master sub-file may incorporate an extra flag in field 170 or 171 which may be used by test 602 to identify the percentage base field (income or expense), and the loop operates to accumulate all such records until test 598 initiates a branch to control 608.

Thereafter, the program loops back to GET 594 the next MAFR, and this processing of successive income Catno records proceeds in the manner described above until the end of the income Catno records is reached and detected by test 602, which corresponds to the condition of register 604 having the complete accumulation and the proper base for computing percentages. This approach relies on a uniform procedure used in setting up charts of accounts, that all initial records correspond to income records, which in turn are followed by expense records. Where a different chart of accounts procedure is used, such as that corresponding to the summary sheet of Fig. 12, or where different areas of expense may interleave areas of income, an alternative procedure can be used

for calculating the percentage base, as noted above in the use of a flag to identify base records. If the test 602 identifies the end of income Catno records, the program branches to operation 608 for the next stage of the processing. Similarly, if a new Acctno is detected by test 598, the accumulation likewise ends and the branch to operation 608 takes place; and similarly if test 598 finds the end-of-file.

The operation 608 uses the STRT-ACCT address in working register 592 for the next GET 558′. In effect, the read heads on the input file 20″ are reset to go back to the first record of the Acctno whose percentage base was just accumulated in register 606. GET 558′ and the series of tests following thereafter that form a loop 559′ all correspond to similar operations and tests in the subroutine of Fig. 9B, and the parts corresponding to those described above are referenced by the same numerals with the addition of a prime. As described for Fig. 9B, the first record to be processed is the first General-Title record 152, which is detected by test 566′ and printed out by operation 572′. Thereafter the YTD record 153 is detected by test 564′, and operation 610 accumulates it in the Level-I registers 404 and 405, and also computes the percentages of these amounts on the basis established in the two sections of register 606. Thereafter, operation 612 prints out the category record with the appropriate current-month and YTD amounts being printed in the corresponding columns 128, 130 of the summary sheet of Fig. 11 and the corresponding current-month and YTD percentages being printed in the associated columns 582, 584. Thereafter, test 614 determines if the current YTD record is an income record. If YES, its amounts are added to the appropriate Level-II registers 406 and 407, and if No, its amounts are subtracted from the corresponding Level-II registers 406 and 407. This net accumulation in the Level-II registers 406 and 407 provides a running total, for example, of the gross profit, with the income being incremented and the expenses or costs of that income being decremented. From either control 616 or 618 the program returns to GET 558′. When a Level-I total record 155 is detected

by test 568′, control 620 computes the percentages of the two totals in registers 404, 405 on the bases established in the two sections of the register 606, and print-out 622 prints on the summary sheet the total Catno, the description, and the Level-I totals established respectively in registers 404 and 405 and the corresponding percentages; the Level-I totals are blanked. The next MAFR is obtained and the process continues, depending upon the type of record, in the manner described, and when a Level-II record is detected by test 570′, control 624 computes the Level-II percentages, using the amounts in registers 406 and 407 and based on the totals established in the two sections of register 606. The Level-I totals are also blanked at this time. Print-out 626 prints the Level-II total, the Catno, its description, and the Level-II percentages, and blanks the Level-II totals. Thereafter, test 562′ detects a different Acctno in a succeeding MAFR and control 628 blanks all of the total registers and the percentage-base register 606, and the program returns to 544 (Fig. 9A) to process the next account. If the end of MAFR is detected by test 560′, the program branches to end-run 546.

In operation, the controls 594 through 604 are connected as a loop 605 to develop the base of percentage computation. This loop 605 operates as a preliminary to the remainder of the processing of a particular account, and after the percentage base has been fully accumulated in register 606 by control 604 for a particular account, the control 608 resets the address of the input file 20″ to the start of that account. Thereafter, loop 559′ operates to process the successive MAFRS of that account's sub-file to print out the various areas of the summary sheet and to accumulate and print out totals as defined in the total MAFRS of the sub-file, as well as to calculate and print out percentages on the accumulated basis in register 606. The Level-II registers 406, 407 are used to accumulate gross profit as the difference between income and expense.

This invention is not restricted to any particular number of levels of totalizing. It has been found that a Level-II control is generally desirable for presenting a major

or grand total of two or more Level-I or intermediate totals. These total levels may be readily specified in setting up any chart of accounts. In addition, a third type of level is often desirable for the purpose of showing differences between other totals (e. g. for profit and loss). That is, a Level-III total record is inserted in any chart of accounts by specifying a particular identifier therefor, which is recognized by a particular test (similar to test 568′ or 570′) that is provided to generate a series of control operations (similar to 624, 626) in connection with Level-III register (similar to registers 406, 407) which is automatically incremented and decremented by suitable controls (similar to 614, 616, 618). The Level-III totalizing affords the flexibility of providing a net or difference between precedent sum totals of the Level-I or Level-II variety. Thereby, a net profit or loss may be furnished in the Summary Sheet Run, as described above. In addition, where it is desired to provide a balance sheet statement for a business, a Level-IV totalizing can be specified by a specific total record inserted in the chart of accounts. The operation performed likewise consists of an incrementing and decrementing, and the Level-III register (or another similar to it) is used. The Level-IV operation consists of testing the contents of its register for a zero-balance; if it is a zero-balance, it is printed out, and if it is not, the difference is printed out and the register reset. In a Level-III control, the register is not reset until a new account is indicated or until a Level-IV or -V control is called for. Another variation in the form of a Level-V control is used with incrementing and decrementing of the register in the manner described above; the Level-V control calls for a print-out at the specified level, and the register is reset. This Level-V is used to obtain a net cash flow at intermediate record-keeping levels, and has application, for example, in multi-branch businesses or in multi-farm agricultural accounts where the individual cash flow for each business or farm is shown on the account. The Level-III control, as distinguished from a Level-V, provides a register-total print-out whenever Level-III is called for, but it

does not reset the register. Each type of total control at any level is effective to reset all lower level registers.

Various modifications, in addition to those noted above, will be apparent to those skilled in the art from the above description. For example, in ordinary banking operations, a customer often makes a deposit incorporating a number of diverse items on the same deposit slip. It is not necessary with this invention that a separate deposit slip be used for each Catno. Instead, a separate Catno may be applied to each item on the deposit slip, and when the bank processes that deposit a separate TRAFR for each of the items associated with a different Catno is generated, and thereafter the system processes these machine records in the same fashion as described above. In a similar fashion, a check is sometimes written covering a number of different record-keeping items, such as a check to cover a credit card bill, where the general credit card may be applicable to a wide variety of charge-account items. For this purpose, the check may have printed areas for different items associated under the total check, and each such item is given a separate Catno in accordance with the customer's own chart of accounts. Here again this multi-item check may be processed by the bank into a separate TRAFR for each item within the check, whereby the customer's record keeping is fully and automatically processed.

The transaction journal may be used in place of the conventional bank statement by the addition to the Jrnl of the beginning and ending DDA balance for each account. With relatively minor modification of the system this combining of the two statements can be developed; that is, an additional record is provided in the MAFI for each account, which carries the account DDA balance for the beginning of each statement period, and the date associated therewith. At statement time, the TR-Jrnl is processed in the manner described and an accumulator register receives the beginning DDA balance and is incremented and decremented by each deposit and check, respectively, to obtain a final DDA balance which is printed out on the check and utilized as the beginning balance for the next statement period.

As noted above, the TR-Jrnl need not be a pre-printed form, but actually may be fully printed by the output printer as the run is performed. That is, the various headings on the Jrnl may be automatically printed out from a control operation specifying that the print-out is to be a journal, with the general format of the journal stored in a look-up table that controls the setting up of that report form in accordance with known techniques. The individual captions in each column and the sizes of the columns likewise can be set up in a look-up table, with the particular specifications of each account (in its master sub-file) being controlling as to which section of the look-up table controls the setting up of the journal format. Thereafter, in other respects the development of the journal report is in the manner described above, with the particular locations of the amounts to be printed out being established by the look-up table controls. In a similar fashion the summary sheet can likewise be developed from a blank form and its format established in a look-up table, with provision for different formats in accordance with the record-keeping system called for by the customer's chart of accounts. The use of the chart of accounts of the MAFI for this purpose will be readily apparent to those skilled in the art from the foregoing description.

In addition, the transaction journal and summary sheet runs may be combined into a single run. For this purpose, separate printers may be used each carrying preprinted journal and summary sheet forms, or a single printer may be used with an unprinted form (which is composed in the manner described above) to present the journal format or the summary format called for by the customer's chart of accounts as well as by the particular section, journal or summary sheet, of the run being operated at that time. For this purpose, the journal run is performed generally in the manner described above, except that the updated MAFI file is written out on a working file that takes but one account's output data as it is processed by the Jrnl section of the run. Thereafter, the updated MAFI on the working file is utilized to complete the Summary portion of the run to print out the

summary sheet in the manner described above. As each record from the working file is processed in the Summary Run, it is then written out to the update file 22″ for the MAFI, as described above, to produce a combined updated file. Another approach for a combined journal and summary run employs a wide, pre-printed sheet which has the journal format on one half and the summary format on the other. As each active Catno of the Jrnl Run is processed, the summary for that active Catno is then printed out on the summary part of the report. That is, as the Jrnl is processed for any Catno, all the data for the summary print-out exist in working storage at that time, as will be apparent from the description of Fig. 8 above. This process is repeated for each active Catno; in order to have a parallel presentation of corresponding rows of the two reports, the data for any inactive Catno are not printed out. The general titles may be printed out and spaces left for corresponding rows on the transaction journal without destroying the neat presentation of that report. The totals may be omitted from the summary sheet, or instead they may be accumulated and printed out, but generally would be limited to totals for the active Catnos. As a supplement to this monthly, abbreviated summary statement, periodically (such as on a semi-annual basis) a full summary statement is provided in the manner described above for Fig. 9.

For the purpose of saving master file storage, one may modify the MAFI format from that shown in Figs. 5C, D and E. That is, for certain Catnos, such as those which experience shows are most commonly used and in which uniform descriptions are accepted by customers, the descriptive portion of the Catno may be omitted from the MAFR and stored instead in a look-up table. The MAFR for that Catno carries a flag instead of the description, and the flag during the Summary Sheet Run calls for an entry into the look-up table at the proper Catno for reading out the description to be printed. Though this can be done with all of the Catnos, generally for versatility in meeting the varied needs of businesses and personal financial record keeping, it is desirable also to make provision for the storing of specific descriptive titles in the

MAFI, as described above. Even where the pre-assigned titles are used for Catnos, and they are stored in a look-up table, nevertheless the customer can be afforded the versatility of selecting his own chart of accounts from an overall category listing. In the pre-assigned system, if a customer does not wish to utilize the pre-assigned description, he may still employ the same Catno and supply his own description; in the absence of the aforementioned flag, the look-up table is not entered and the customer's own choice of description is printed out instead. It has been found desirable in many cases to employ a combination of pre-assigned descriptions with the flexibility of customer-chosen descriptions. One use of such a system is for purposes of information retrieval of the pre-assigned categories; certain classes of accounts (e.g. farmers dealing with certain classes of crops or livestock) would have total data in the Catno types of MAFRS that could be extracted and analyzed on a statistical basis to provide valuable interpretative data of a particular region or community. Other examples of the use of such systems are to determine what the general population is spending for medical expenses or housing, and the like.

In the processing of accounts at the cycle period, instead of processing them by a specified range of Acctnos as described above, the cycle flag 147 may be used. Thereby, at each particular Jrnl and Summary Sheet Run, the operator need only specify a particular cycle flag, and the operation of selecting the proper account is by way of a match on the cycle flag rather than determining whether the Acctno fell in the specified CYC range.

In Fig. 13, a top view of a check imprinting device 640 is shown, with parts broken away to show the use of a customer service or credit card 642, which is used to develop certain portions of the check. The service card 642 may be a plastic disc of the conventional form used for credit cards, in which raised imprinting characters are provided for the payer's bank name 644, payer's Acctno 646, the bank routing number 648, and payer's name 650. This credit card is positioned at a predetermined location on the printing bed 652 by guides 654

which position the various edges of the card 642. A keyboard 656 is provided having slidable keys 658, each movable in a slot 660 and connected by appropriate linkages (not shown) to an individually rotatable number wheel 662 having raised characters for imprinting. A bank 664 of such keys 658 and associated wheels 662 is used for entering the amount of the check in dollars and cents. A second bank 666 of similar keys 668 and wheels 670 is used for entering the Catno of the check. A set of imprinting wheels 672 is readily adjustible to present the date of the check, and a semi-permanent template 674 contains the name and account number of the payee organization, as well as the name and transit number of the payee bank. The check writer 640 operates in a fashion similar to the conventional credit card imprinter, in which the credit card is inserted in the guides 654, the position of wheels 672 is adjusted to enter the date, keys 658 are adjusted to enter the amount of the check in wheels 662, and keys 668 are adjusted to enter the Catno in wheels 670.

Positioned on top of the bed 652, service card 642 and wheels is a multi-leaf document with interleaved carbons, such as is commonly employed with credit card imprinters. The hinged head 676 of the imprinter moves down over the printing bed 652 and positions the document 678 therebetween. The head 676 may contain a printing roller (not shown) which is connected to a handle 680 slidable in a slot 682. Movement of the handle from left to right through the slot 682 applies roller pressure to the paper document to receive the impression from the raised lettering of the service card, the template 674, and the number wheels 662, 670 and 672. Thereby, a document is printed which may be used as a machine-readable record; that is, the type fonts of all of the raised lettering on the service card 642, the template 674 and the number wheels are chosen to be of suitable special type for optical or, if desired, magnetic-ink reading devices. The printed checks developed by the imprinter 640 have their transaction fields at specified locations for a document reader 16 to handle and to transfer into suitable combinatorial electrical signals. This imprinter 640

may be used by sales organizations in place of the usual charging systems. Thereby, a machine-readable document is developed directly by the writer of the check, with the Catno entered in machine-codable form when and where the check originates.

The document 678, when in the form of a check, would be pre-printed to carry the usual "Pay to the Order of" information at an appropriate place adjacent to the template 674, as well as the signature line and other appropriate data. Thereby, the bank check that comes out of the printer 640 is complete both as a machine-readable record and as a check. For such purposes the template 674 need not be employed, but it is preferred in order to carry the data required for automatic processing of the payee Acctno and payee's bank transit number. With these machine-readable records, the check serves the dual function of a debit against the account of the credit-card holder as well as a credit to the business (payee) extending the credit. Such a check (or credit-card receipt) would be handled in the same fashion as described above when treated as a debit to be charged against the payer's account, and would be processed for account balance and record-keeping purposes in the manner described above (Figs. 2 and 3). In addition, this check is used as a credit transaction record for purposes of automatically crediting to the payee's account as though it were a deposit slip, in the same manner as described above for such deposits. For record-keeping purposes of the payee's account, a "credit" category code field can be added at a specified machine-readable location associated, for example, with the template 674. Thereby, all of the information for automatic record keeping of the payee's account is also provided on this "check." Accordingly, the imprinted check document 678 provided by this device 640 is a uniquely constructed machine-readable record in that it contains, in machine-readable form, the information provided by template 674. That is, the check carries data fields 677 and 675, respectively, for the payee's account number and that of his bank (with the appropriate routing information) so that it can be processed automatically as a machine-readable document for

the payee. Accordingly, the check assumes a double character for automatic processing; in addition to serving all of the functions of previous checks, it also serves as the equivalent of a deposit slip, since the data required for routing to the payee's bank and for posting to the payee's account therein is in machine-readable form on the check. The complete processing can be performed without composing additional documents as is presently required and without the manual labor and successive handlings associated therewith, each of which often results in the entry of errors on hand-composed documents. The large amount of labor required by banks to compose the machine-readable records is eliminated, and the responsibility for accurate entry of the machine-readable data fields is placed in the hands of the originators of the documents.

Similarly, a check imprinter 19 of the type shown in Fig. 13 is adopted for use by the bank customer in his own establishment for writing checks directly with the RK Catno directly on the check in machine-readable form. Where the device 640 is used by the payer to write his own checks, the template 674 is not utilized, nor is service-card 642 required; for the document 678 is in the form of pre-printed checks of conventional machine-readable form carrying all of the data required for processing the check, and the device 640 serves to supply the remaining machine-readable character fields for the category number and the dollar amount. Thereby, the payer writes a check that carries in machine-readable form all of the data required for automatic processing through his own bank, so that it can be automatically posted to his DDA account and automatically processed for record keeping in the manner described above. For this purpose a simply constructed device is formed of the essential character of the device of Fig. 13, but small enough and compact enough to be carried in one's pocket in the same fashion as a conventional check folder. An embodiment of this device is illustrated in Figs. 14A and B.

In the pocket check-folder 690 of this invention, two body members 692 and 694 are hinged together and a stack of checks 696 is attached to the bottom member

694 and retained in position between the two members 692 and 694. Preferably, a fold-over flap 698 is hinged to member 694 and folds over the checks 696 and cover member 692 to prevent accidental imprinting. The flap 698 is also used to carry the conventional register book 699 in which the payee records the check data. Such checks are pre-printed and carry (as in currently available systems) machine-readable fields of the account number of the payer as well as the routing data of the payer's bank. In accordance with this invention, the pocket check-folder is constructed so that the payer completes the imprinting of the check as a machine-readable document for automatic processing in the system described above. For this purpose, the cover 692 is provided with two sets 700 and 702 of slidable tapes 704 each carrying a sequence of spaced numeric printing type characters 706 attached to the inner tape surface (e. g. each tape contains the numerals 0 through 9). A suitable number (e. g. three or four) of such tapes 704 form set 700 for the Catno and a suitable number (e. g. five or six) form set 702 for the dollar and cent amount. The raised imprinting type characters 706 may be of the rubber-stamp type carrying the ink in the imprinting type material; or alternatively, impact type paper may be used for the checks 696 in which the ink is formed in small, separated globules which are embedded in the surface of the paper, and which are burst by the type during the imprinting process. The type fonts are suitable for any particular document reader 18 that is used. These tapes carry the type characters 706 in reverse printing relation.

The check-folder and writer 690 is preferably formed of inexpensive plastic materials so that it can be discarded after a stack of checks 696 are used. The inside surfaces of the members 692, 694 and 698 are formed of a sheet of soft plastic material such as that used for conventional check folders. The bottom and flap members 694 and 698 are preferably formed of at least two layers of such plastic, whereby checks 696 and register 698 are neatly secured to the inside layer. The checks 696 are preferably secured to a stiff paper-

board or plastic backer which, in turn, is secured (e. g. by bonding) to the inside layer of member 694. Thereby, the checks are retained in predetermined relation to the type characters 706 for printing at predetermined areas 708 and 710 respectively associated with the Catno tapes 700 and the amount tapes 702. The plastic between the members 692 and 694 is grooved to form an integral hinge 712. A similar hinge 714 is grooved in the plastic material between members 690 and 698. The outer surface 716 of cover 692 is formed as a sheet of relatively stiff plastic material that is bonded to the inner plastic face. Extending across the width of the outer face 716 (Fig. 14B) are a series of deep depressions 718, which are spaced the width of each tape 704, so that each adjacent pair of depressions form a guide channel for a tape 704. Each tape is retained and slides smoothly between a pair of guides 718. A cut-out opening 720 in face 716 is formed between each adjacent pair of guides 718, and extends about half-way from near the upper edge to about the middle of the cover. The tapes 704 are formed as flexible, rectangular plastic or metallic members, and each has a projection or hook 722 at the upper end which extends through the opening 720 to be accessible to the finger nail of the user. Along the outer face of each tape 704 is a sequence of numeric characters that are uniformly spaced and arranged in positions directly opposite to the type characters 706. A window 724 in face 716 is formed as a clear plastic section at about the center of the face 716, and extends down from the lower edges of the openings 720 about the height of the numeric character. The length of each tape 704 is about half or less the width of the cover face 716. Each tape slides as a simple linear device in the channels formed by guides 718 up or down from a medial position at which, for example, the character "4" is positioned in the window 724 as illustrated in Fig. 14B. All of the characters may be positioned at that window either by running the slide up to half its length up the channel (with "9" in position at the window 724, in the extreme upper adjusted position), or down the channel to about half

its length (with "0" being in the window at the extreme lower position). The operator can quickly and easily make these adjustments by manipulating hook 722 on each tape (or by providing somewhat larger openings 720 and knurling the tape surface, whereby the user's finger can engage the tape directly to manipulate it). The section of the cover face 716 below the medial window 724 is preferably made opaque or diffused, so that the window 724 clearly presents and identifies the characters to be printed. In the inner, flexible surface of cover 692, two windows 726 and 728 are provided at positions diametrically opposite to the window 724 (and the corresponding window, not shown, for the amount tapes 702). The type characters 706 for the Catno tapes 700 can project through the window 726, and similarly, the type for the amount tapes 702 can project through the window 728.

In operation, the checks 690 have the pre-printed coded fields 730 in a suitable area of the check (e. g. along the lower edge), in a suitable manner, such as described above with respect to Fig. 4. The user may write his check in the conventional manner, except that the numerals for the Catno and the dollar amount are imprinted directly in machine-readable form. That is, the user sets the tapes 700 for the Catno by sliding them up or down to position the desired Catno in the window 724, and similarly, positions the tapes 702 for the dollar amount. Thereafter, the cover 692 is pressed down toward the bottom member 694 so that the inner face of the cover rests against the top check 696. The user slides his finger across, or individually presses down on, each character at the window 724. The stiff plastic cover 716 transmits the finger pressure to the flexible tapes 704, so that the corresponding type characters on the reverse sides of the tape project through the windows 726 and 728 and are impressed to print on the top check 696 at the areas 708 and 710, respectively. Thereby, the encoding of the check as a machine-readable document for automatic record-keeping at the bank is completed. When a check is not being written, the flap 698 folds over between members 692 and 694 to prevent any false imprinting.

Accordingly, with the check writing device 690, the ordinary bank customer may directly encode his check as a machine-readable document so that it may be automatically processed thereafter. The bank need not re-encode the document and thereby avoids the problem of making errors in its customer's records, and the relatively expensive manual labor of encoding such documents is largely eliminated.

The service or credit card 642 may be constructed to carry the Catno characters directly. That is, credit card 642 may be constructed with a set of number wheels or slidable number tapes, having a few raised numerals for imprinting. When the card is used, the owner adjusts the wheels or tapes to set up the Catno for the particular transaction. In addition, on the reverse side of the credit card a space may be provided for listing appropriate Catnos and category descriptions, so that the customer can readily enter the Catno for each transaction to which his credit card is applied. Thereby, the credit card operating company may supply the user of the card with a periodic record-keeping report of his transactions as well as with a record-keeping analysis and report thereof in the manner described above.

Various other forms of machine-readable records may be used with this invention. For example, punch cards or punched paper tape may be used to develop transaction records that carry data fields in machine-readable form (e. g. the fields described above with respect to Fig. 4).

This invention is not limited to use with demand-deposit banking accounts; the record-keeping may be performed separately from any banking operations and, as noted above with respect to Fig. 13, the record-keeping system may be applicable to credit-card accounts in a similar fashion. The RK system of this invention may be fully integrated with the DDA system. For example, the DDA master file may be combined with the RK master file, so that a single master sub-file is provided with each account and all of the transactions are stored with each master sub-file (or a separate transaction file may be provided). It is not necessary for the DDA

master file to carry RK flags that identify the RK accounts; the checks and deposit slips may be pre-printed with a machine-readable field (e. g. by specially assigned Acctnos) to identify the account as such. That field is carried in the TRAFRS and the daily RK TRAFI 82 (Fig. 2) may be constructed via a test similar to test 80 which identifies the TRAFRS for RK processing. Similarly, credit-card accounts may be appropriately identified for RK processing. The system is not limited to using the MAFI Change Run for correcting the RK MAFI records where, for example, a Catno had been omitted from a transaction and therefore was not reflected in the accumulated YTD totals. The correction may be made in the Jrnl Run by generating a TRAFR with the Catno and appropriate data so that the YTD record can be properly updated by control 436 (Fig. 8C). Such a TRAFR is supplied with an appropriate flag so that control 436 is limited to accumulation in register 400 but not in register 402 or 408; thereby, the Acct-tot is not changed since it had previously accumulated all transactions, with or without valid Catnos. Such modified systems will be readily apparent to those skilled in the art from the foregoing description.

As described above, this invention provides control mechanisms for a stored-program digital computer, whereby the record-keeping of financial transactions of different types of persons and businesses can be automatically performed. This invention is adaptable for use with various types of computers including those with large or small memory capacities and those with different types of storage files and input-output devices. In addition, the principles of this invention are applicable for use with a special purpose computer having all of the control mechanisms of the various runs and the files built into the computer in the form of equivalent logic design. For example, various ones of the above-described runs may be built into the control system 14 by suitable logic circuits. The RK MAFI may take various known forms and it functions as a logic board or control program in that each master sub-file specifies the control operations to be performed in accordance

with the sub-file's particular chart of accounts. However, the stored-program form of the invention described above is preferred in that it is comparatively much less expensive and more compact. In addition, the stored-program enables one to modify, enlarge or simplfiy the system by modification of one or more portions of the runs; such modification is readily performed without rewiring of the machine circuitry. Similarly, each customer's chart of accounts may be readily modified to meet the customer's changing record-keeping requirements simply by inserting or deleting the various records making up his master sub-file. The RK MAFI may be constructed to have a greater or lesser amount of variability among the accounts. For example, instead of the totalizing records 155 and 157 that are inserted in and made part of the master sub-file, pre-assigned Catnos (such as 100, 200, 300, etc.) may be used solely to initiate the totalizing operations in the Summary Run; and each time a master sub-file is processed, tests similar to tests 568 and 570 (Fig. 9B) would determine when any of the pre-assigned Catnos fall between those in the registers 184 and 186 and call in the associated totalizing operations. In constructing each chart of accounts, with such pre-assigned totalizing Catnos, the category areas are similarly predetermined by the total Catnos. Various other modifications of this invention will be apparent to those skilled in the art from the above descriptions of illustrative forms of this invention. The appended claims are intended to cover such modifications as are encompassed by the scope and spirit of this invention.

Appended hereto is a print-out of a complete program of one form of this invention for use in the IBM 1400-series computers. The print-out is written in the Autocode assembly language, and the program when assembled into the machine language for said IBM computer, controls and directs the operation of that computer in accordance with the invention and particularly with the form thereof illustrated in Figs. 6-9. Also appended hereto is a detailed flow chart of said complete program.

[APPLICATION DRAWINGS]

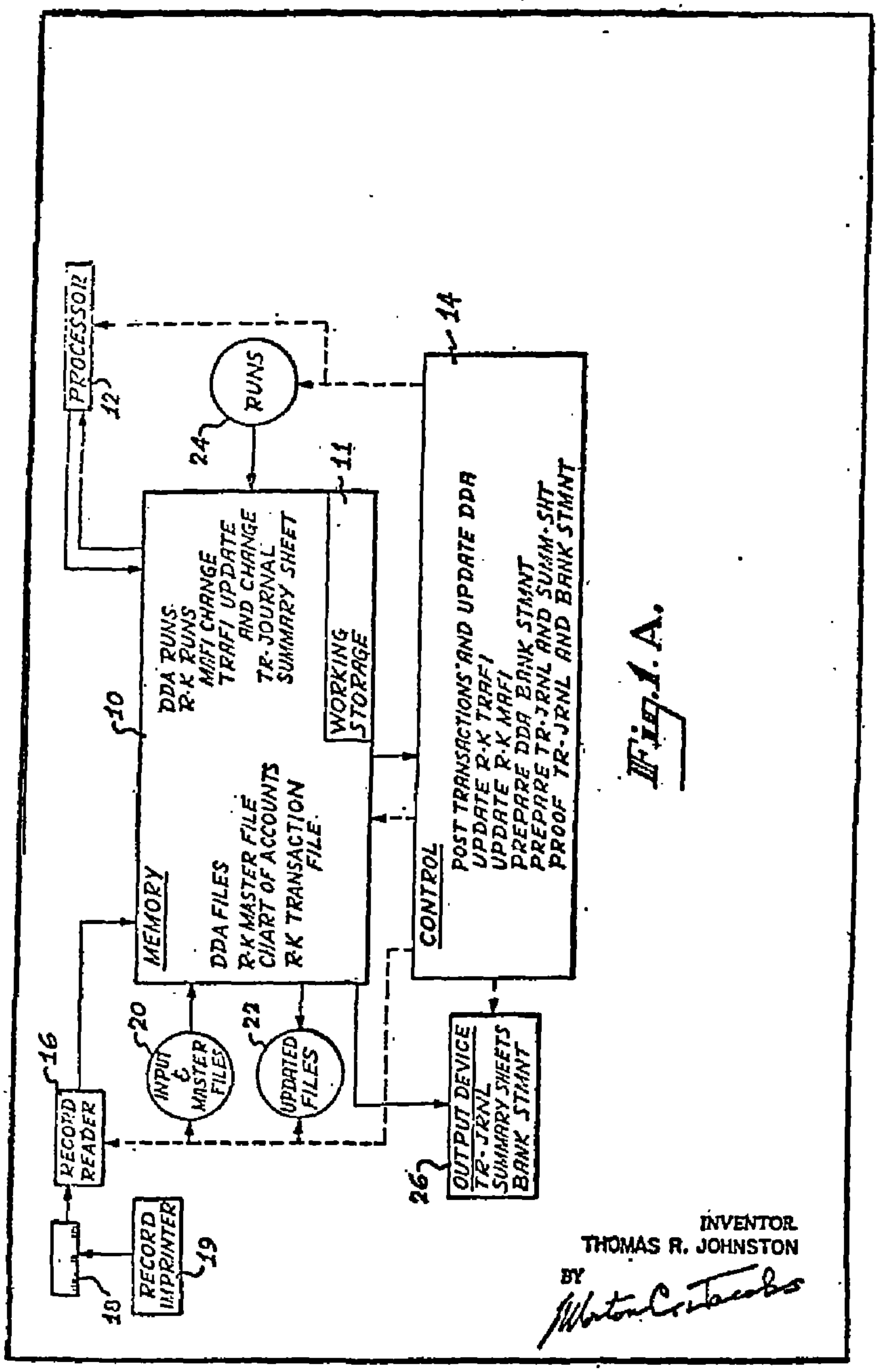

Fig. 1. A.

INVENTOR
THOMAS R. JOHNSTON
BY

Fig. 1B.

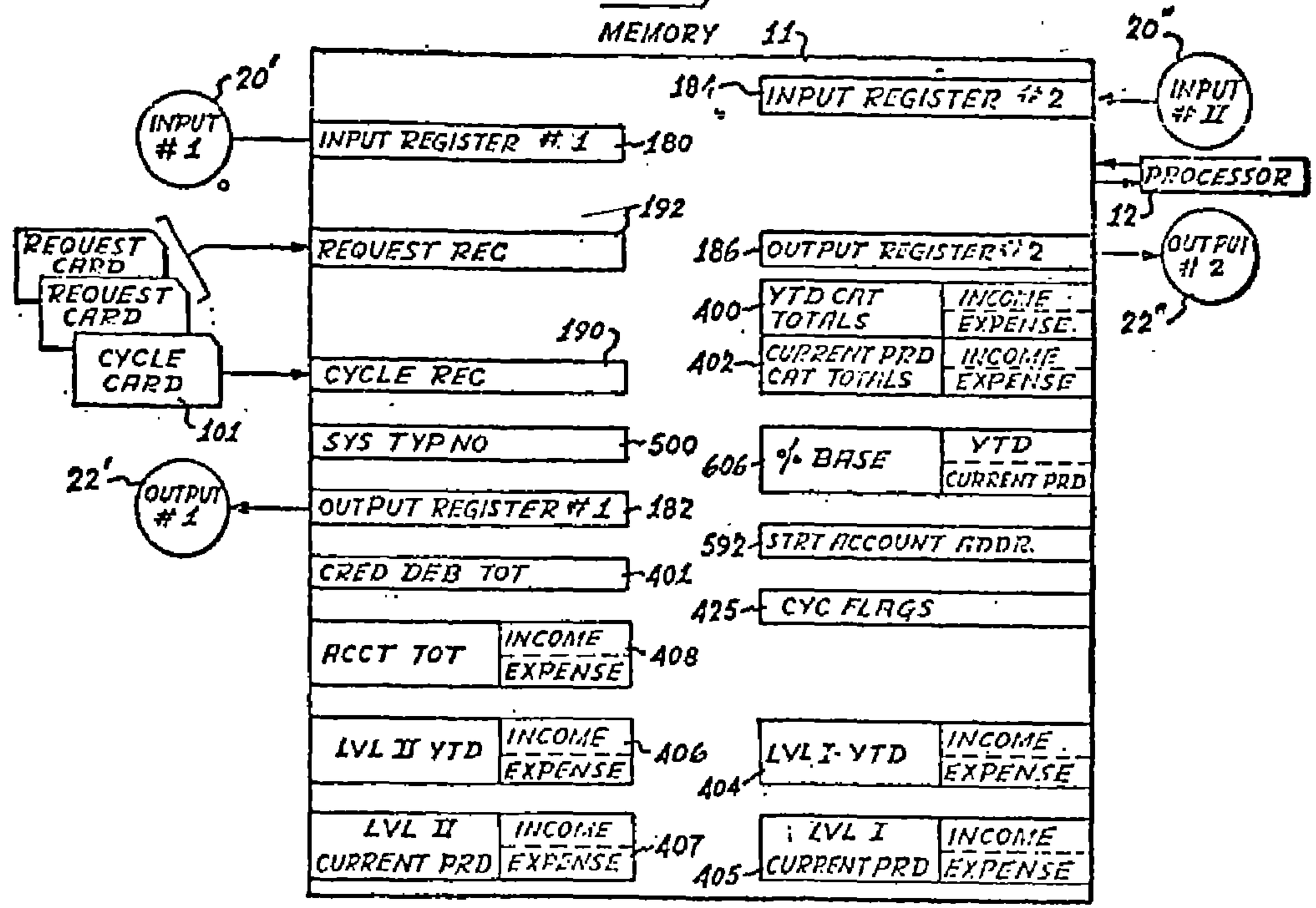

INVENTOR
THOMAS R. JOHNSTON
BY

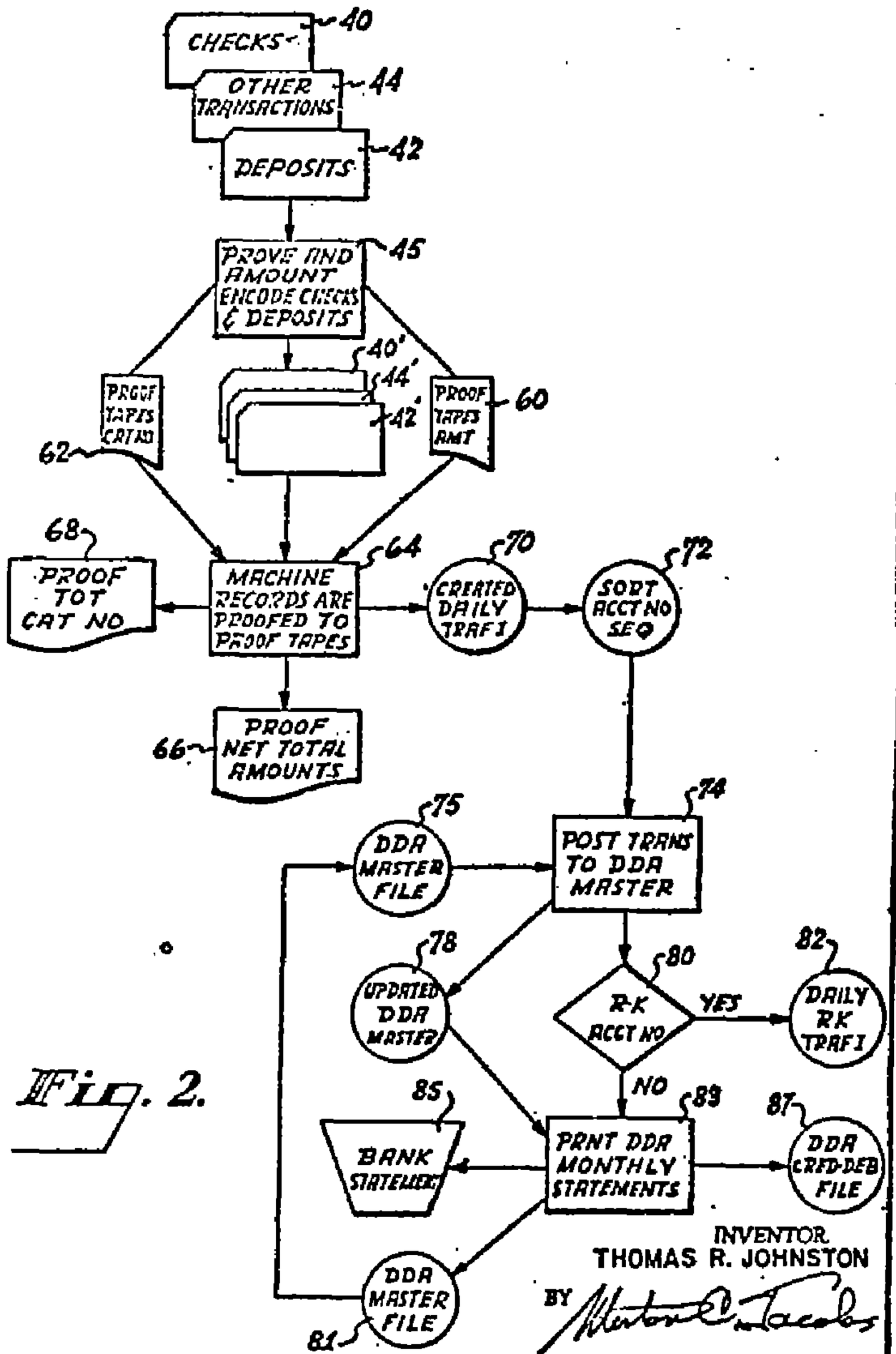

Fig. 2.

INVENTOR
THOMAS R. JOHNSTON
BY Morton E. Jacobs

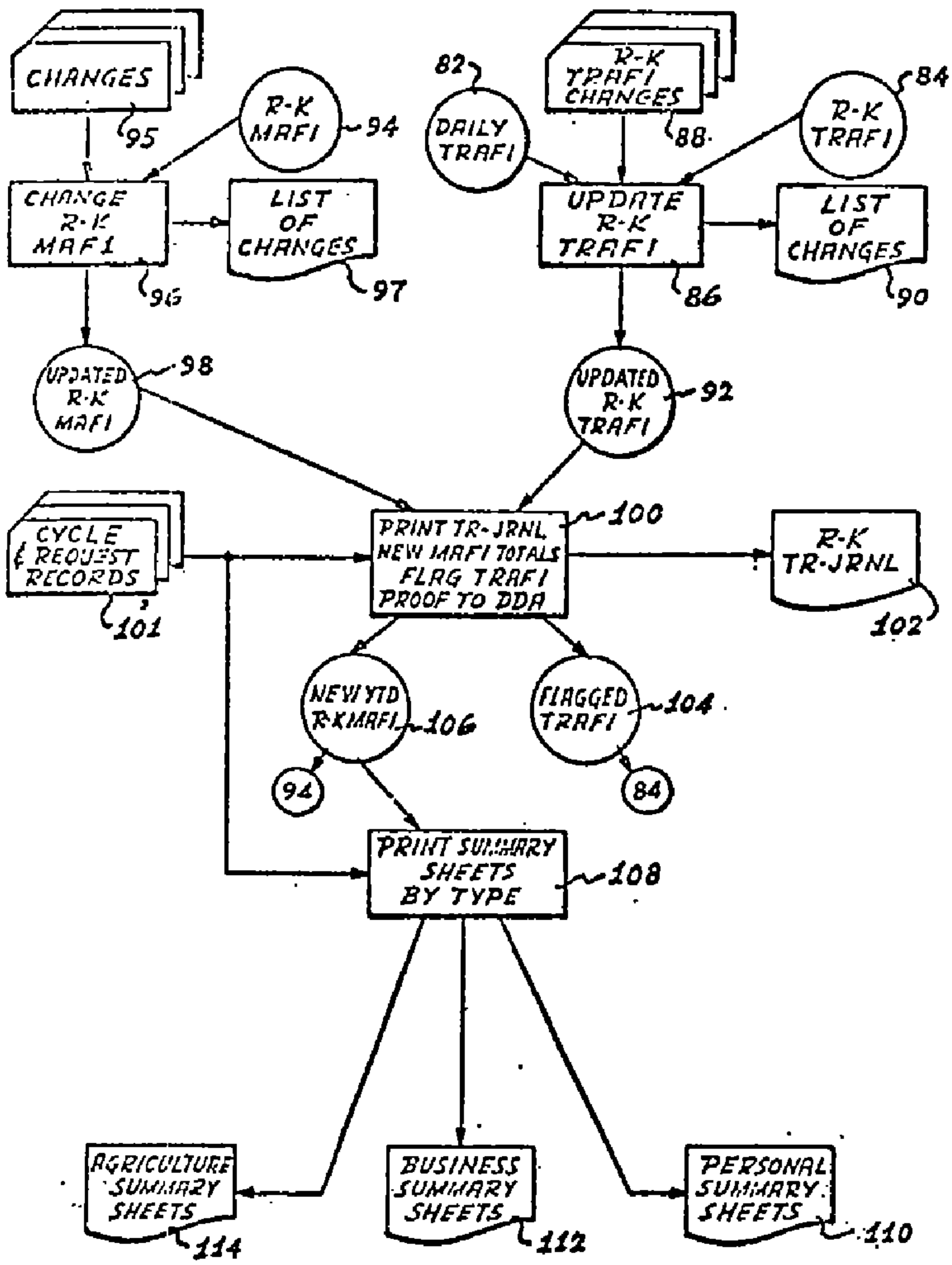

Fig. 3.

INVENTOR
THOMAS R. JOHNSTON
BY Merton C. Lucas

NAME ADDRESS
ACCT. NO

PERIOD
MO YR

SUMMARY STATEMENT

114

CAT NO	CATEGORY NAME	MONTHLY EXPENSES	MONTHLY INCOME	YEAR-TO-DATE EXPENSES	YEAR-TO-DATE INCOME

Fig. 12.

NO 250 72-372/713

SAM McHOSE
NEVADA IOWA 19

PAY TO THE ORDER OF $ 16.25/00

SIXTEEN AND 25/100 DOLLARS

CAT. NO.
46 1 2 3

⑆025⑆0713⑈03722⑆ ⑆ 1 1 6 8 5 7⑈ 1 2 3 ⑆ ⑆000000625⑆

CHECK NUMBER 54	TRANSIT 48	ACCOUNT NUMBER 50	CAT. NO 58	TRAN CODE 56	AMOUNT 52

Fig. 4.

INVENTOR
THOMAS R. JOHNSTON
BY Wilson, Ottenstein & Kaplan

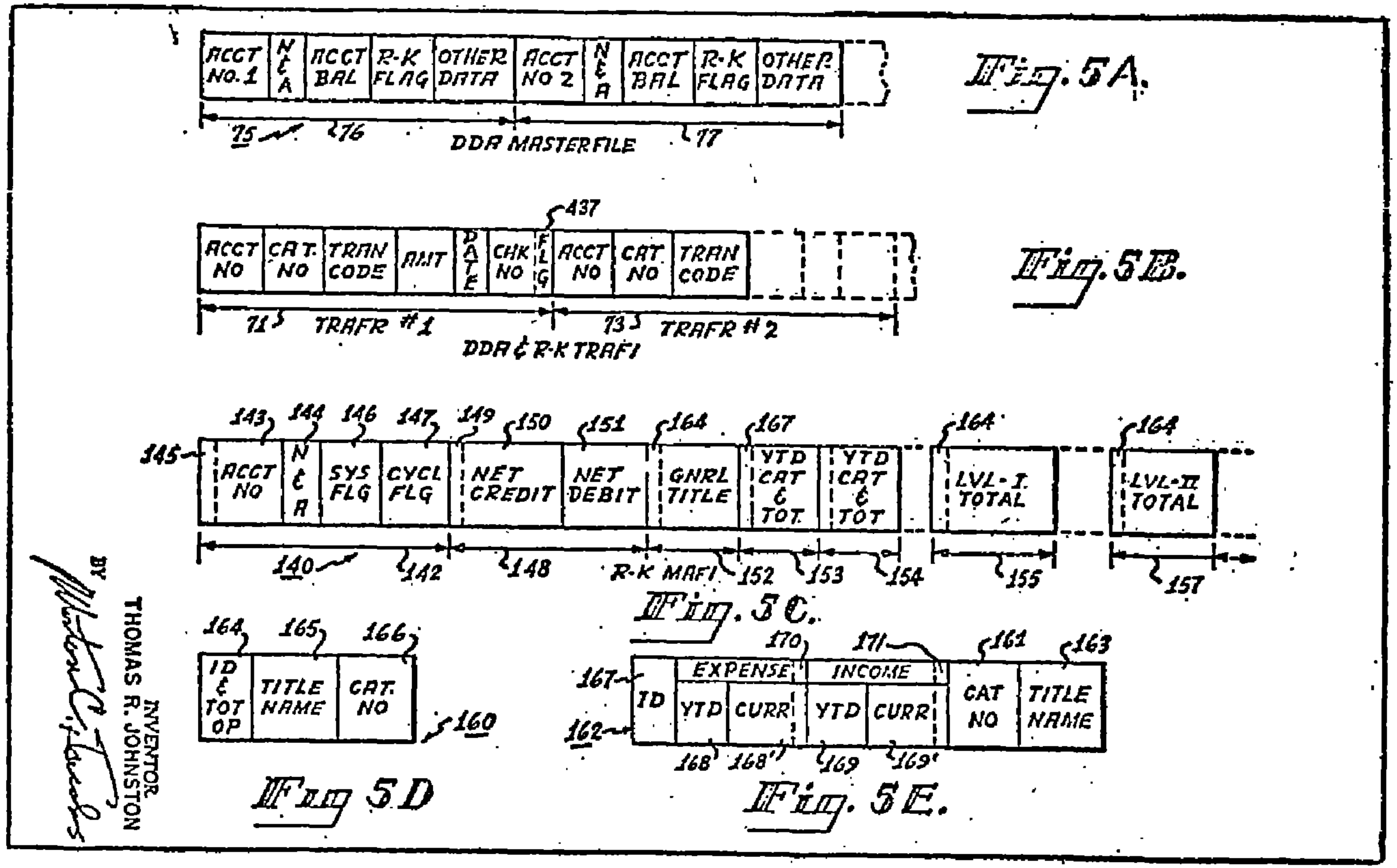

INVENTOR
THOMAS R. JOHNSTON
BY

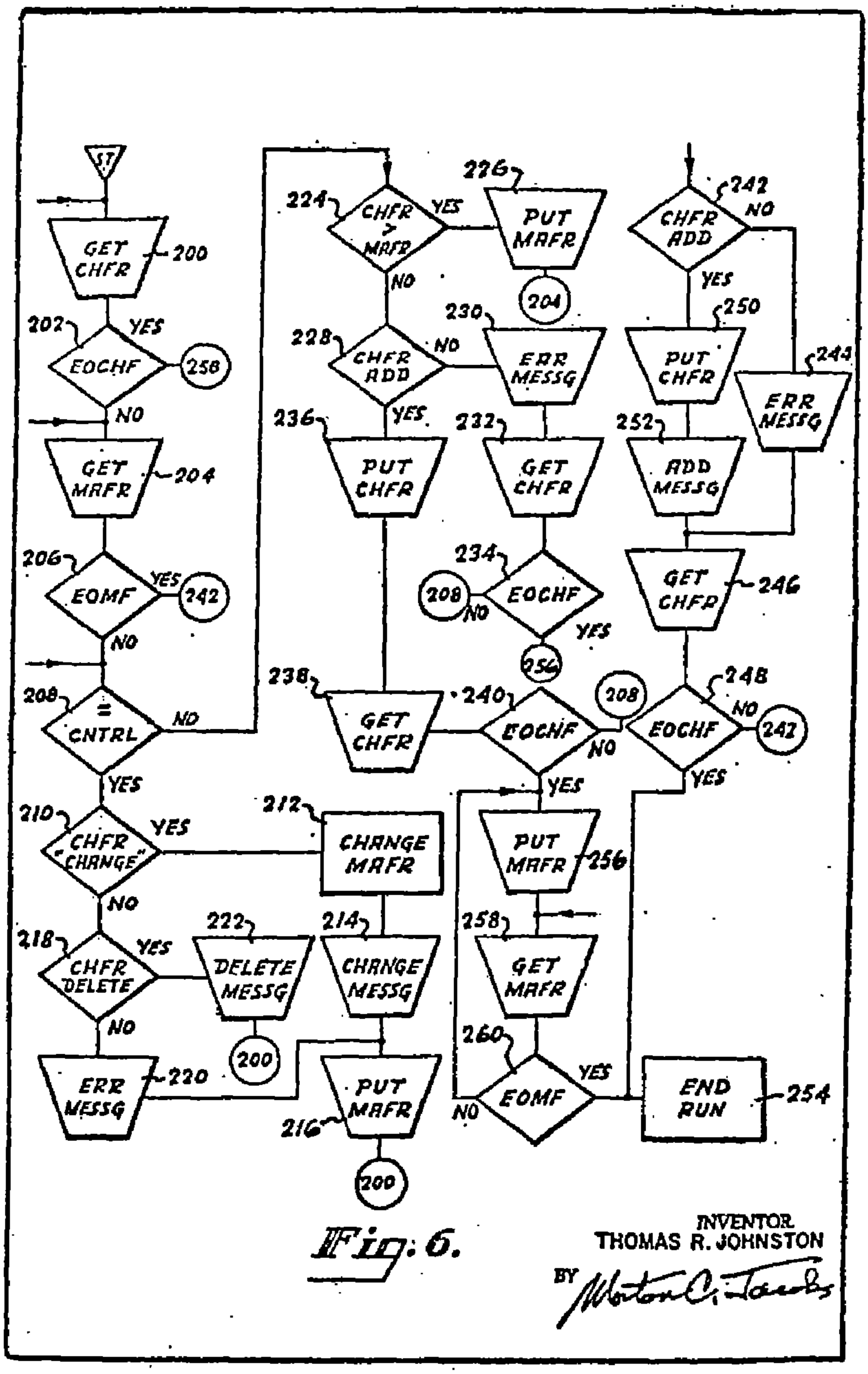

Fig: 6.

INVENTOR
THOMAS R. JOHNSTON
BY Morton C. Jacobs

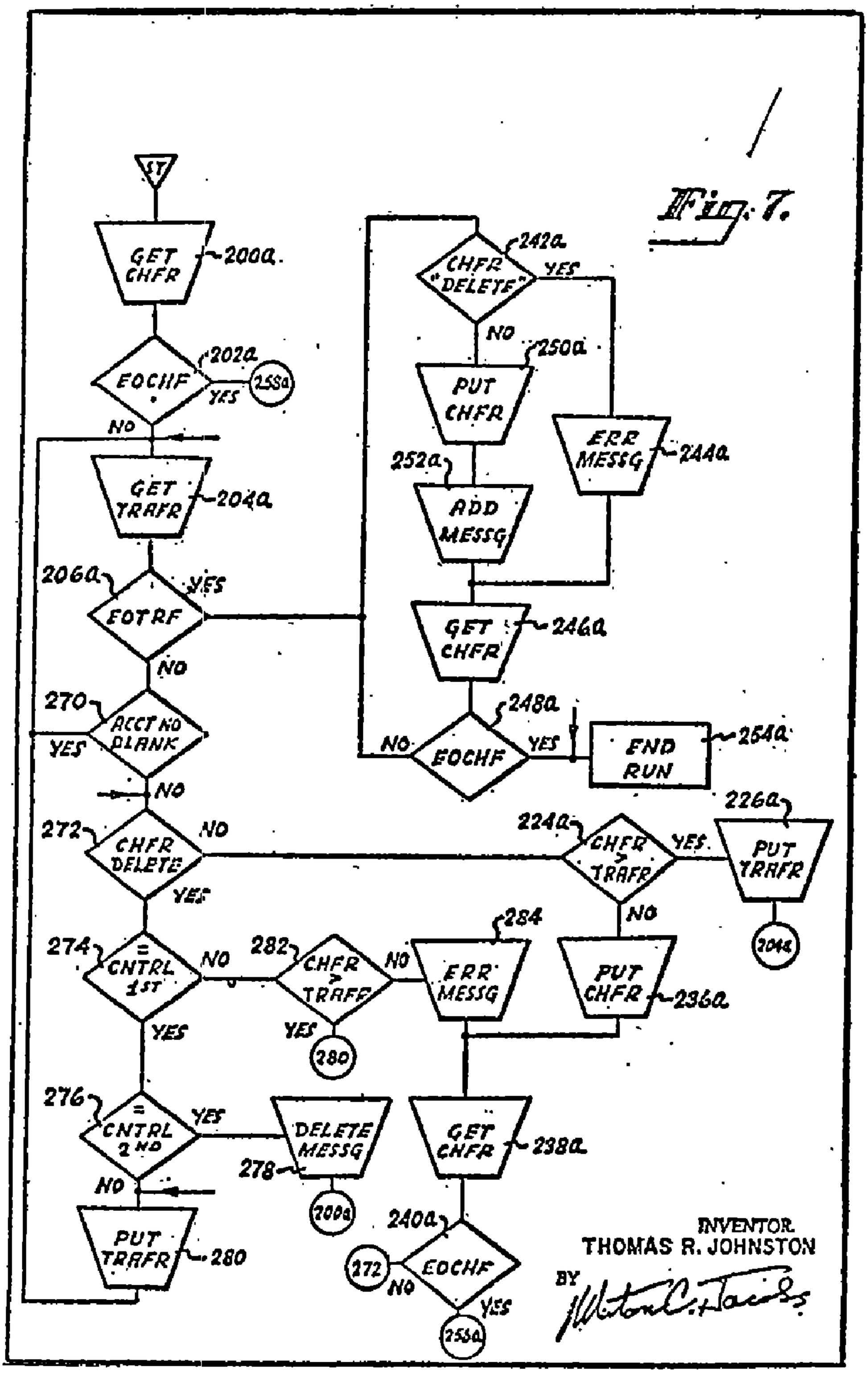

Fig. 7.

INVENTOR
THOMAS R. JOHNSTON
BY Milton C. Jacobs

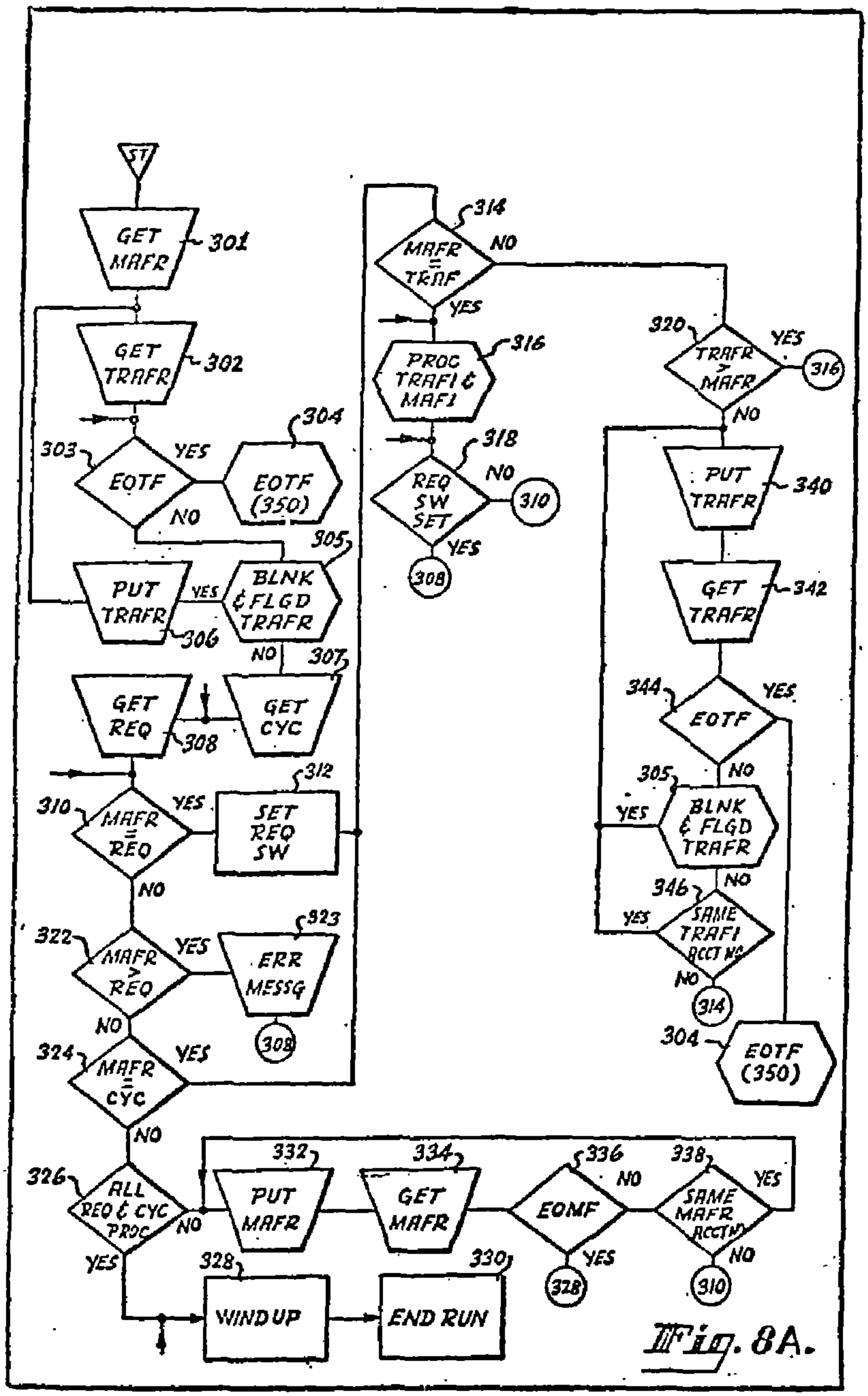
ST
GET MAFR
301
GET TRAFR
302
303
EOTF
YES
NO
EOTF (350)
304
PUT TRAFR
306
YES
BLNK & FLGD TRAFR
305
NO
307
GET REQ
308
GET CYC
310
MAFR = REQ
YES
SET REQ SW
312
NO
322
MAFR > REQ
YES
ERR MESSG
323
308
NO
324
MAFR = CYC
YES
NO
326
ALL REQ & CYC PROC
NO
YES
PUT MAFR
332
GET MAFR
334
EOMF
336
NO
YES
328
SAME MAFR RCCTN
338
YES
NO
310
WIND UP
328
END RUN
330
314
MAFR = TRAF
NO
YES
PROC TRAFI & MAFI
316
318
REQ SW SET
NO
310
YES
308
320
TRAFR > MAFR
YES
316
NO
PUT TRAFR
340
GET TRAFR
342
344
EOTF
YES
NO
305
BLNK & FLGD TRAFR
YES
NO
346
SAME TRAFI RCCTN
YES
NO
314
304
EOTF (350)

Fig. 8A.

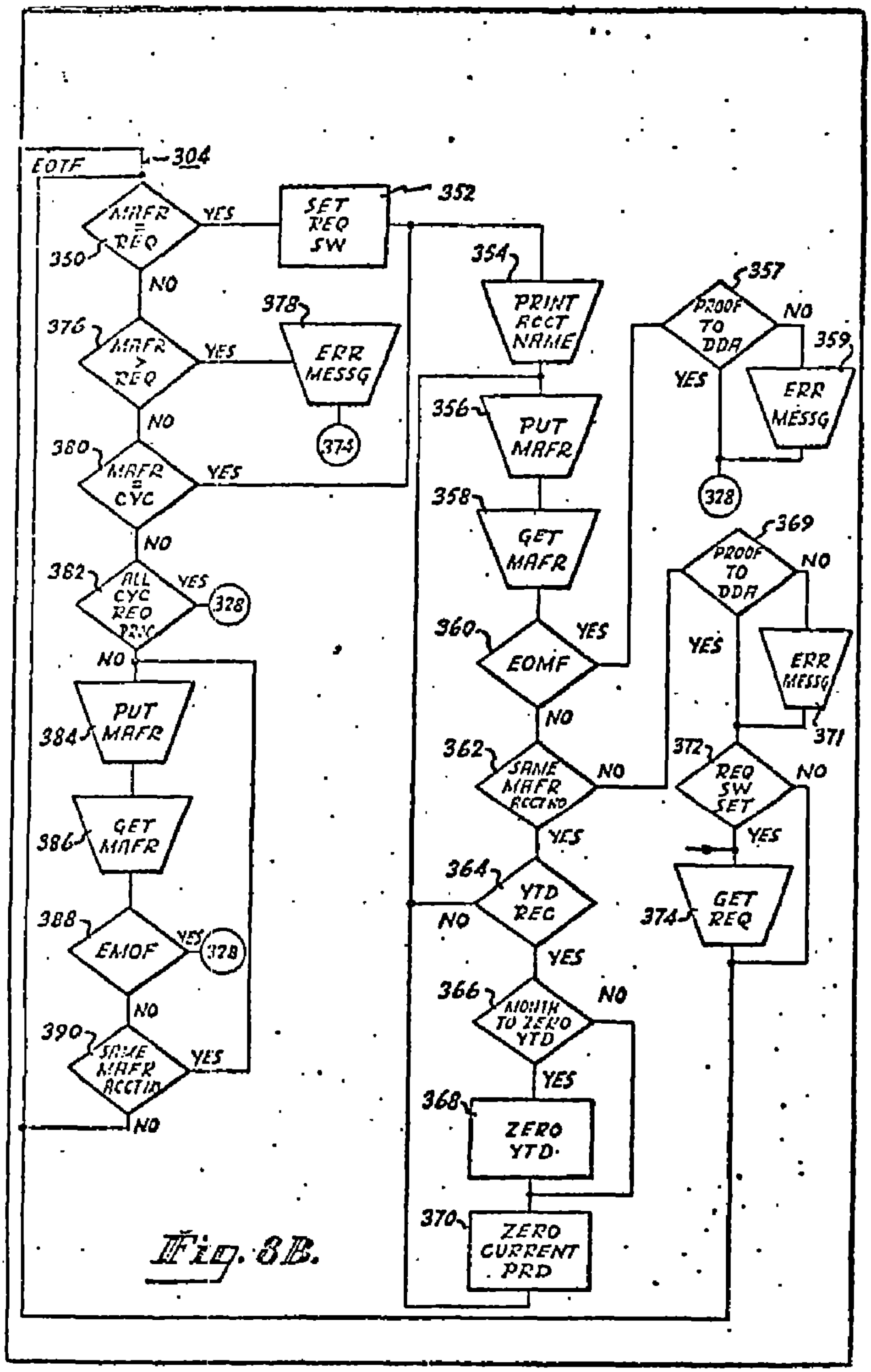
EOTF
304
MRFR = REQ
YES
SET REQ SW
352
350
NO
378
MRFR > REQ
YES
ERR MESSG
376
NO
374
MRFR = CYC
YES
380
NO
ALL CYC REQ PRC
YES
328
382
NO
PUT MRFR
384
GET MRFR
386
EMOF
YES
328
388
NO
SAME MRFR ACCT NO
YES
390
NO
354
PRINT ACCT NAME
356
PUT MRFR
358
GET MRFR
360
EOMF
YES
NO
SAME MRFR ACCT NO
NO
YES
362
YTD REC
364
NO
YES
MONTH TO ZERO YTD
366
NO
YES
ZERO YTD
368
ZERO CURRENT PRD
370
PROOF TO DDA
357
NO
YES
ERR MESSG
359
328
PROOF TO DDA
369
NO
YES
ERR MESSG
371
REQ SW SET
372
NO
YES
GET REQ
374

Fig. 8B.

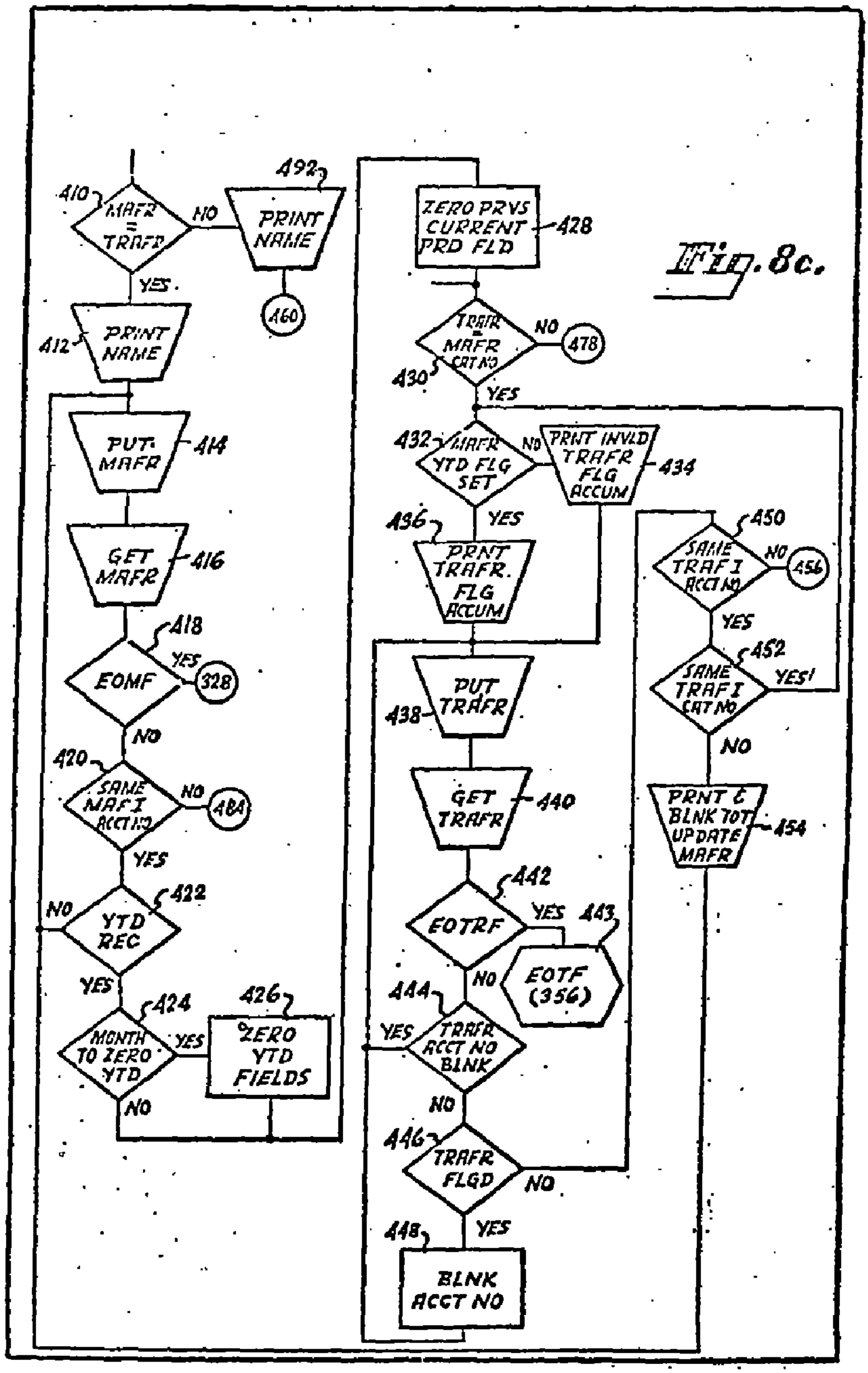
410
MAFR = TRAFR
NO
492
PRINT NAME
YES
460
412
PRINT NAME
PUT MAFR
414
GET MAFR
416
418
EOMF
YES
328
NO
420
SAME MAFI ACCT NO
NO
484
YES
422
YTD REC
NO
YES
424
MONTH TO ZERO YTD
YES
426
ZERO YTD FIELDS
NO
ZERO PRVS CURRENT PRD FLD
428
TRAFR = MAFR CRT NO
NO
478
430
YES
432
MAFR YTD FLG SET
NO
PRNT INVLD TRAFR FLG ACCUM
434
YES
436
PRNT TRAFR. FLG ACCUM
PUT TRAFR
438
GET TRAFR
440
442
EOTRF
YES
443
EOTF (356)
NO
444
TRAFR ACCT NO BLNK
YES
NO
446
TRAFR FLGD
NO
448
YES
BLNK ACCT NO
450
SAME TRAFI ACCT NO
NO
456
YES
452
SAME TRAFI CRT NO
YES!
NO
PRNT & BLNK TOT UPDATE MAFR
454

Fig. 8c.

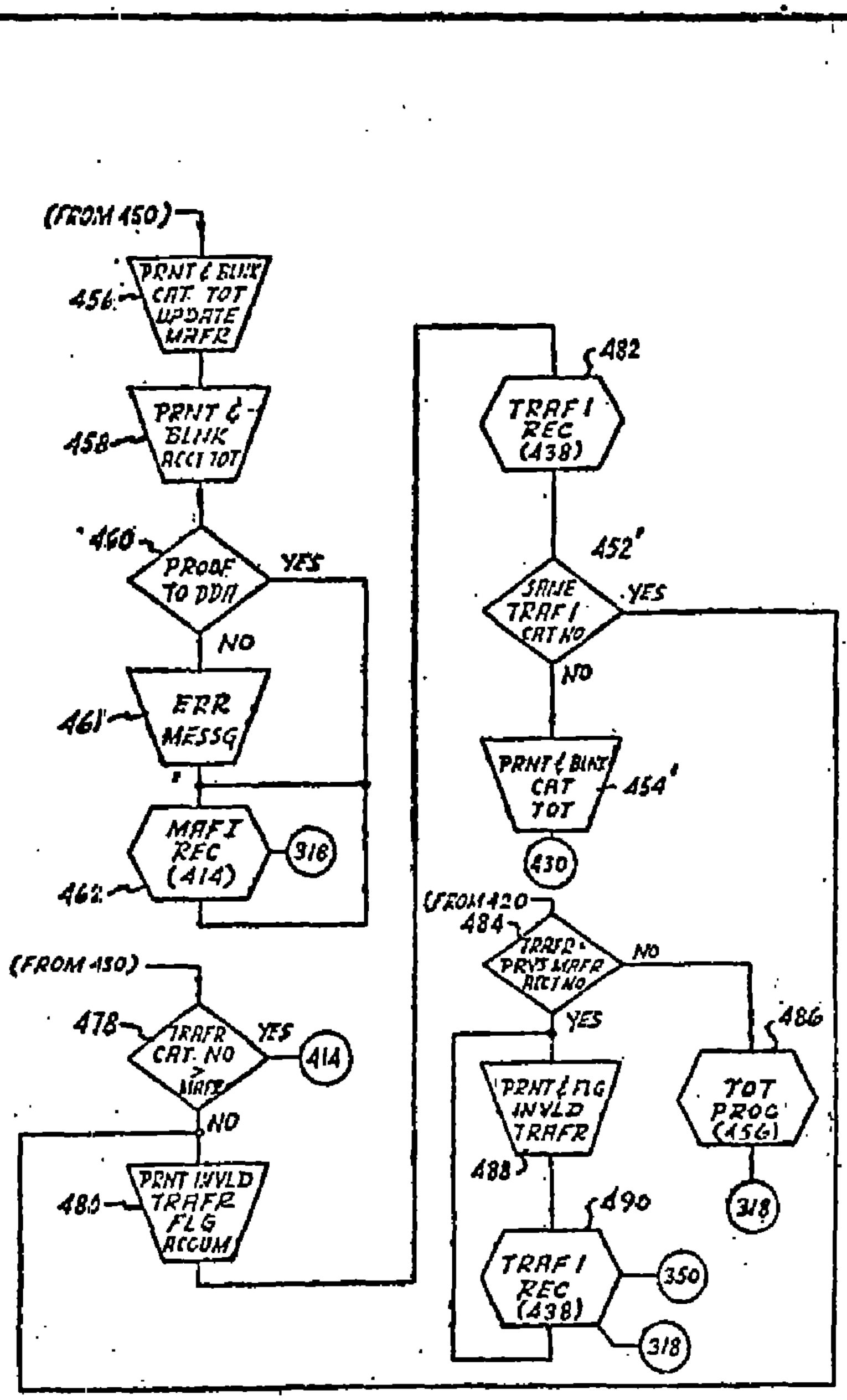

Fig. 8D.

INVENTOR
THOMAS R. JOHNSTON

BY Walton C. Jacobs

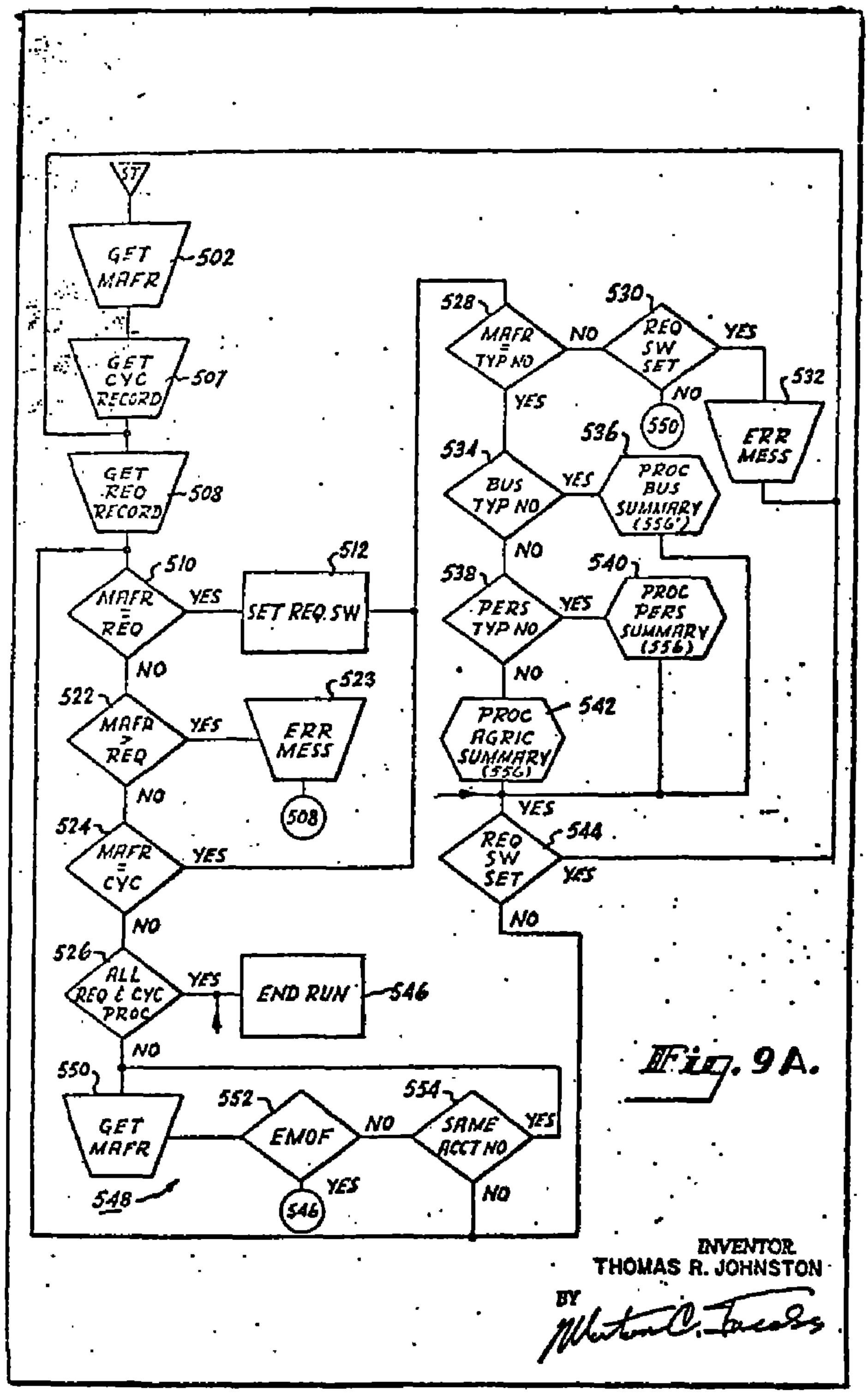

Fig. 9A.

INVENTOR
THOMAS R. JOHNSTON
BY
Milton C. Jacobs

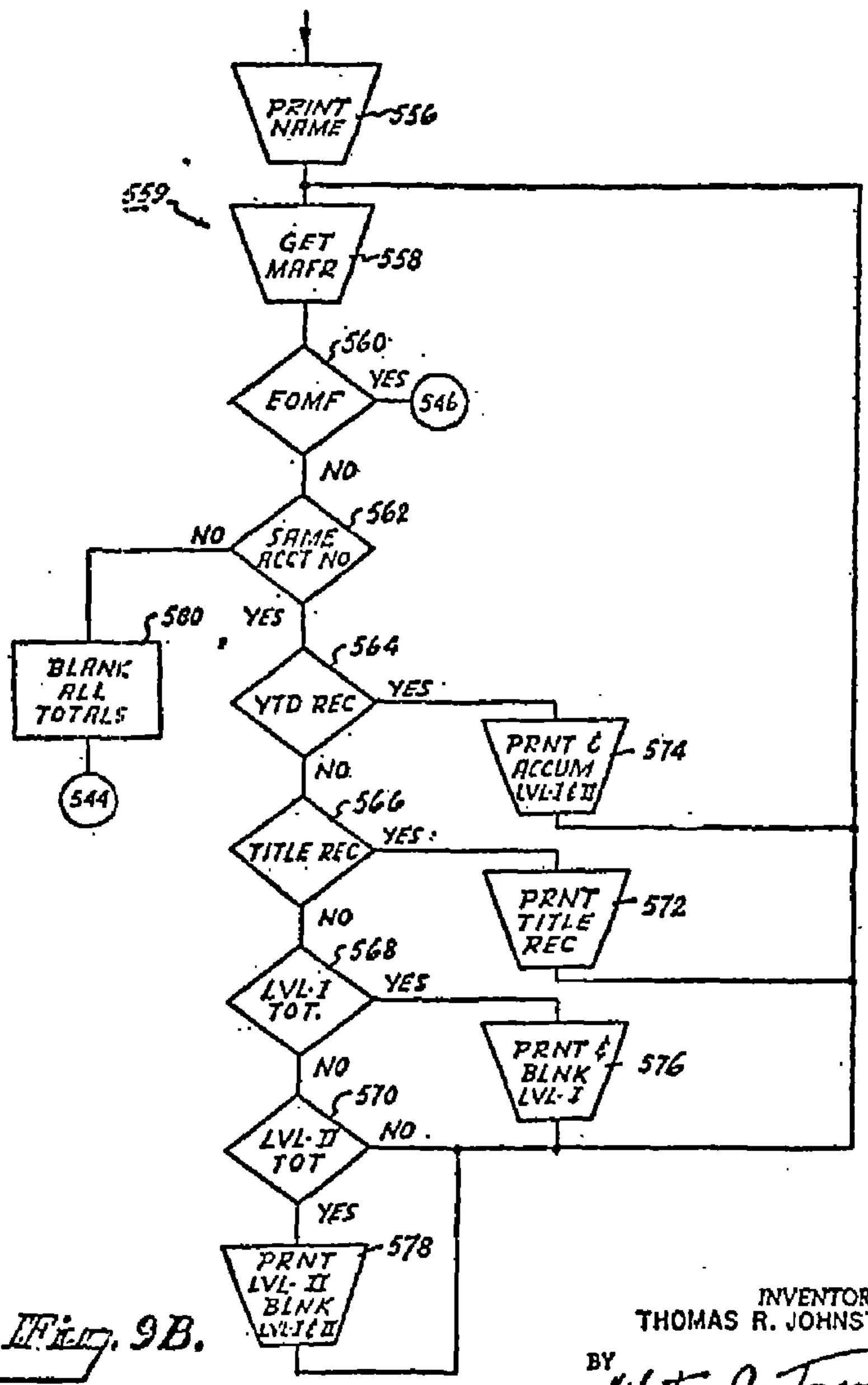

Fig. 9B.

INVENTOR
THOMAS R. JOHNSTON

BY Milton C. Jacobs

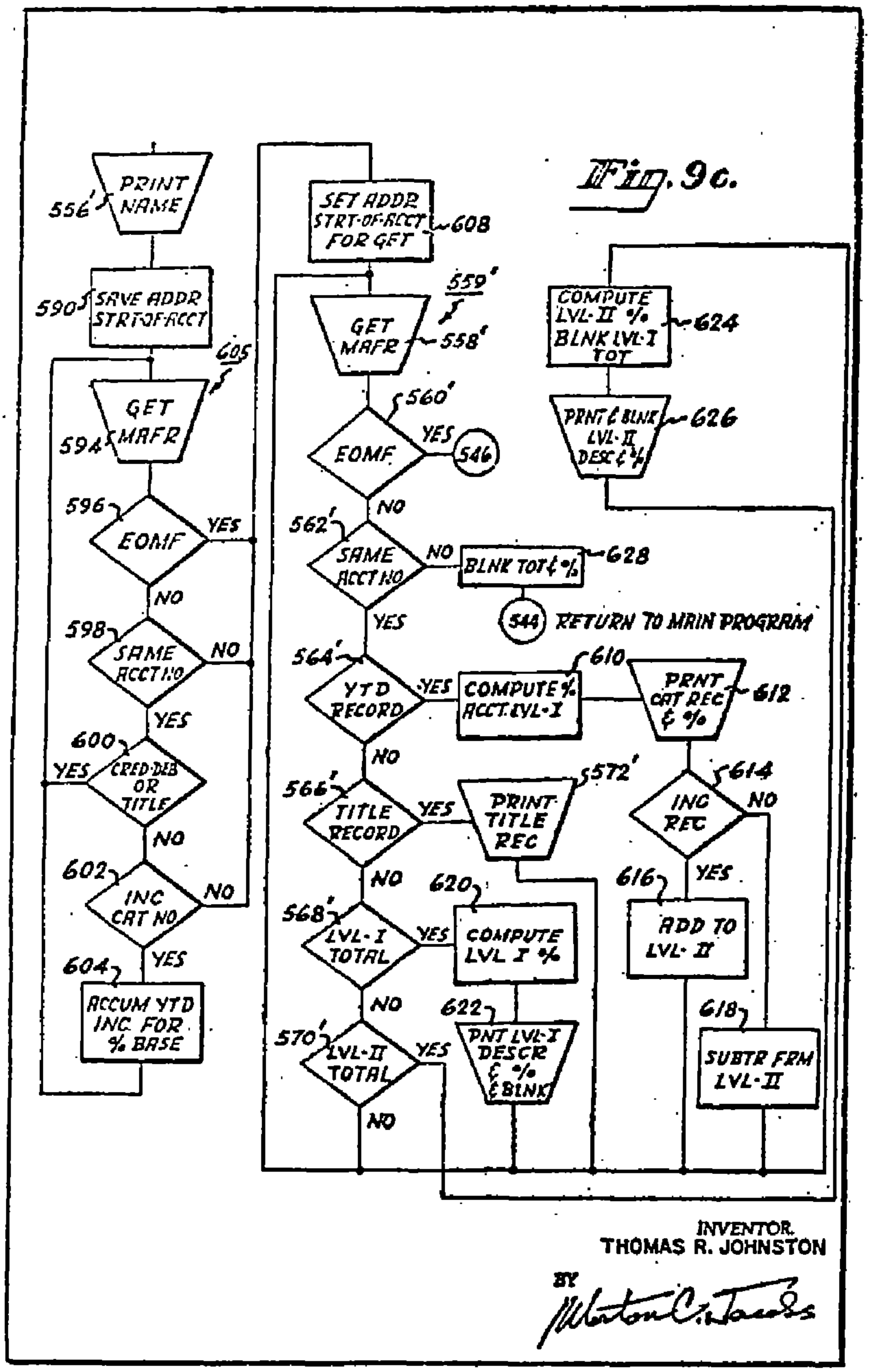

INVENTOR.
THOMAS R. JOHNSTON

BY Morton C. Jacobs

TRANSACTION JOURNAL

PERIOD	ACCOUNT NO	NAME ADDRESS
04 67	21 2-12 3	
MO YR		

CAT NO	CHECK NO	DATE	ACCOUNTS CHECKS	ACCOUNTS DEPOSITS	COMMENTS
	0104	03 25 66	2 87		NON CODE
			2 87		***
128		03 31 66		51 46	INVALID CODE
				51 46	***
131	0101	03 31 66	6 77		
131	0103	04 04 66	2 00		
			8 77		***
			11 64	51 46	ACCNT TOT.

102

Fig. 10.

SUMMARY STATEMENT

NAME ADDRESS ACCT-NO 120

MO YR 122

124 CAT NO.	126 CATEGORY NAME	128 ACCOUNTS CURRENT MO.	130 ACCOUNTS YEAR TO DATE	582 PERCENTAGES CURRENT MO.	584 PERCENTAGES YEAR TO DATE
100	INCOME				
101	DIVIDENDS		8 90		
107	WAGES	511 48	1464 93		
	TOTAL INCOME	511 48	1473 83		
120	EXPENSES				
121	AUTO	40 13	160 95		
125	CLOTHING	5 100	67 141		
	TOTAL EXPENSES	293 12	1240 61		

110

Fig. 11.

INVENTOR
THOMAS R. JOHNSTON
BY Walter C. Jacobs

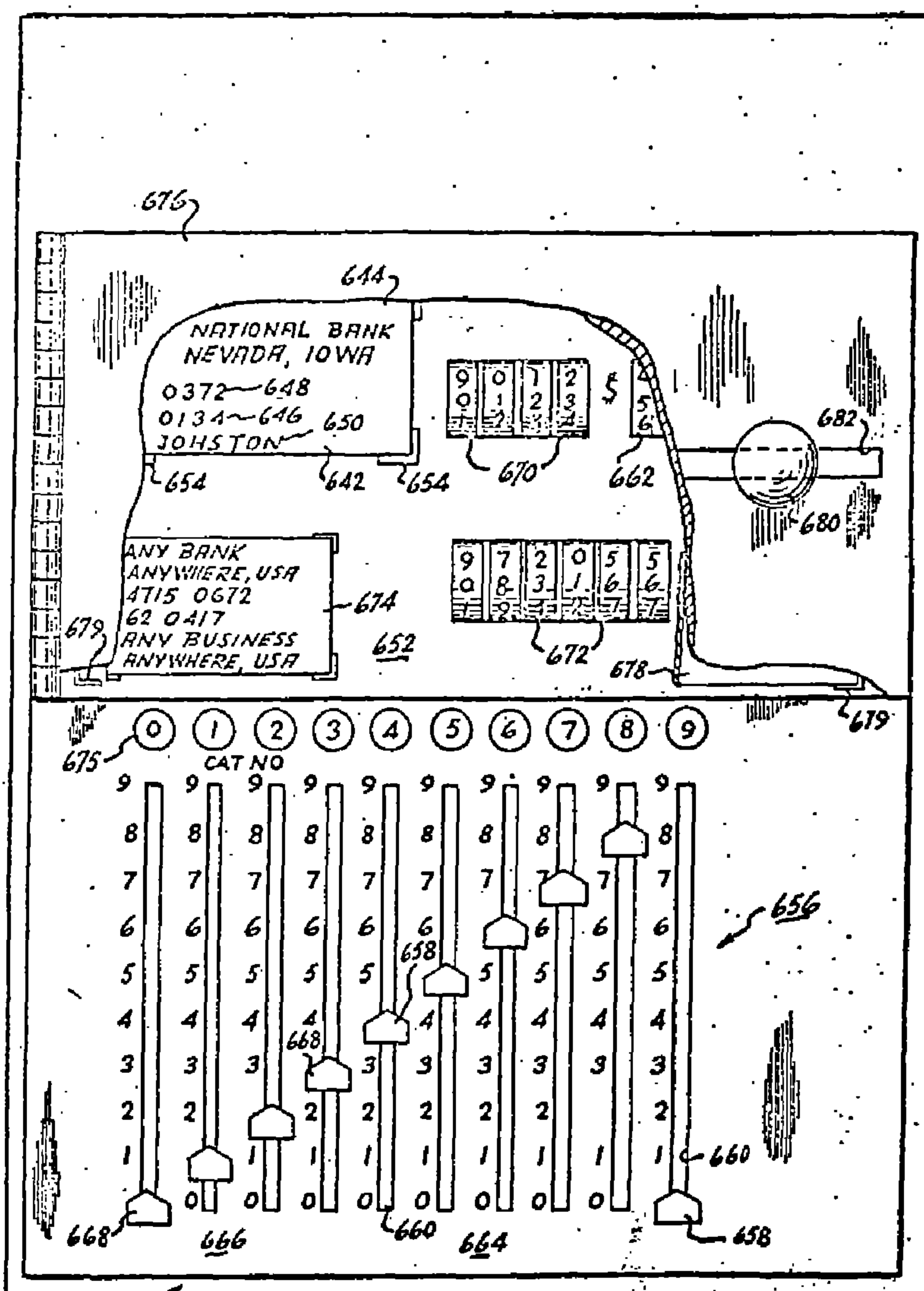

Fig. 13.

INVENTOR
THOMAS R. JOHNSTON
BY Milton C. Jacobs

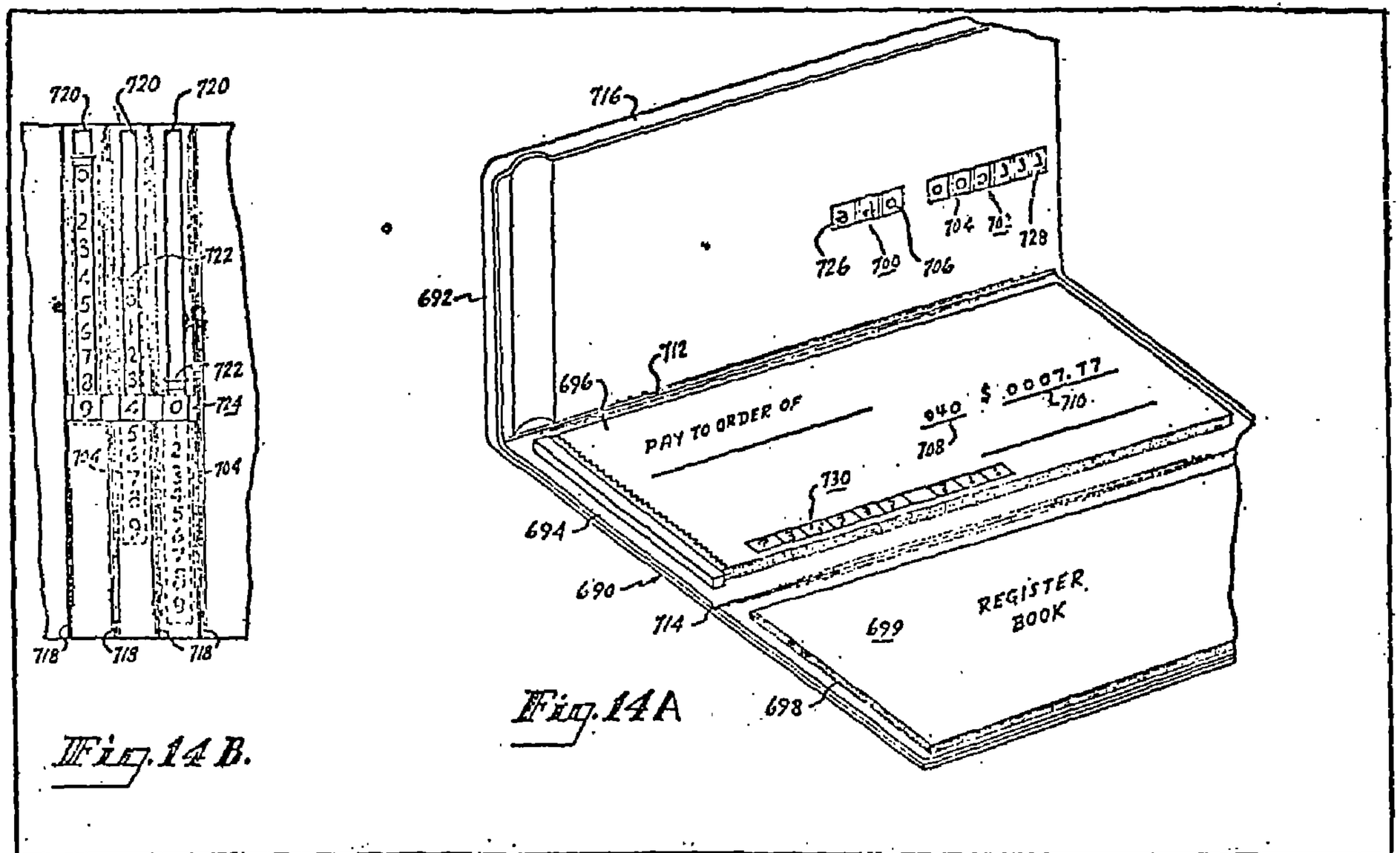

Fig. 14B.

Fig. 14A

EXAMINER'S ANSWER, NOVEMBER 3, 1970.

This is in answer to an appeal from the Final Rejection of Claims 1 through 11 and 16 through 27. Claims 12 through 15 were withdrawn from consideration when applicant acceded, without traverse, to an election requirement. No claim is allowed.

A correct listing of the claims under appeal appears in Pages 3 through 17 of applicant's Appeal Brief.

THE REFERENCES RELIED UPON FOR THE FINAL REJECTION ARE:

3,274,554	Hopper et al	September 20, 1966
3,308,439	Tink et al	May 7, 1967
3,343,133	Dirks	September 19, 1967
3,374,462	Best et al	May 19, 1968
3,407,387	Looschen et al	October 22, 1968

APPELLANT'S INVENTION:

Appellant's invention is a financial record keeping process for monitoring the various dealings of persons using the services of a bank. It is a process that is designed to elicit information from transaction documents, to update the bank's records for such persons, and to then produce monthly bank statements for mailing to such persons.

The process is set forth in the form of a computer program which is to function with an automatic system. Appellant's disclosed best mode is a computer program listing which is to be used with an IBM 1400 series computer. It is noted that appellant's "preferred embodiment" as set forth in lines 11-16 on Page 19 of his Appeal Brief is contradictory in some very important aspects (i.e., elements 10 and 14 on Fig. 1A) to his "preferred embodiment" as set forth in lines 14-22 on page 7 and lines 1-3 on page 92 of his specification.

The various subroutines or phases of appellant's process are set out in Pages 20-40 of his Appeal Brief. It is noted that appellant uses the term "mechanisms" to describe his various program subroutines or phases and concedes that his invention (i.e. process) "is adaptable for use with various types of computers" (see Page 40 of his Appeal Brief).

EXPLANATION OF THE REFERENCES:

The patent to Hopper et al shows a document reader and operating console for input data, magnetic tape transports for master and updated files, memory and processing modules with controls therefore, and a document printer and a magnetic drum as output devices. The various mechanisms of Hopper et al are computer programmed controlled.

The patent to Tink et al shows a banking system having multiple teller stations interconnected with a data processor and a random access unit operating under program control. A bank customer can get full information of his account, updated, at the time he engages in a transaction with a bank teller. Non-personal contact transactions also can be entered in the data processor for recordation and updating of files, however, when it is most convenient to the bank.

The patent to Dirks shows a program controlled data handling system having an input means and input file, a central processing file system, output file and a printer output unit (i.e. Fig. 49 and Columns 3-5) which is used for file maintenance, up-dating for current balances and generating printed output documents.

The patent to Best et al shows an operator as well as program controlled computer, a memory with controls therefore for computational purposes and a printer output unit.

The patent to Looschen et al shows a program controlled banking system similar to Tink et al, and which

has all of the features and abilities of Tink et al. In addition, Looschen et al includes a polling system primarily to establish interconnection between a central control and a particular window machine.

It is noted that appellant admits that all of the cited references are adaptable, when properly programmed, to carry out the methods of his invention (see Page 41 of his Appeal Brief) as is set forth in his computer program.

THE FINAL STATUS OF THE CLAIMS:

Claims 1-8, 10, 11 and 16-24 are rejected under 35 U.S.C. 112 for failing to particularly point out and distinctly claim the subject matter which the appellant considers as his invention, as was stated in Paragraph 13 of the January 6, 1970 Final Action which is incorporated herein. Appellant's claims are considered as misleading and hiding his true contribution in that he is claiming a program as structure using the means-plus-function format.

Claims 1-8, 10, 11 and 16-24 are rejected under 35 U.S.C. 112 as claiming a program in means-plus-function language (in apparatus form) as indicated in Paragraph 15 of the January 6, 1970 office action which is incorporated herein. The claims are considered to be directed to a use for a known machine.

Claims 1-11, and 16-24 are rejected under 35 U.S.C. 102 as being anticipated by Hopper et al, Tink et al, Dirks or Best et al as indicated in Paragraph 16 of the January 6, 1970 Final Action which is incorporated herein. Appellant's "banking system limitation" is not considered controlling.

Claims 25-27 are also rejected under 35 U.S.C. 102 as being anticipated by Tink et al or Looschen et al, as indicated in Paragraph 18 of the Final Action and which is incorporated herein.

RESPONSE TO APPELLANT'S ARGUMENTS:

Since the appellant has chosen to argue the patentability of his claims in several categories, this RESPONSE will follow such format in order to provide continuity between Argument and Response.

1. *The Rejections on Prior Art*

The first claims considered by appellant are Claims 25-27, which are method claims which were submitted by the appellant by supplemental amendment. Such claims stand rejected under 35 U.S.C. 102 as being anticipated by Tink et al or Looschen et al.

The two cited references are considered to comprise all of the computer elements specified in appellant's claims, i.e., a computer master and sub files, account numbers, records for category codes and monthly statement generators.

Appellant places great weight for the patentability of his method claims on his terms "demand deposit banking accounts" and "category code numbers". The theory behind "demand deposit banking" accounting and "savings accounts" accounting is essentially the same. Transactions against specific bank accounts are normally organized by "category codes" (i.e. deposit, withdrawals, charges against or interest earned). Whereas, the appellant uses code numbers for his individual transactions and Tink et al or Looschen et al do not, both procedures end with the same result (i.e. updated bank records and the monthly generation of bank statements).

In essence, the appellant is seeking patent coverage for a process which (1) he has assigned a particular name to and (2) uses numbers. No new steps over the prior art methods are considered to be found in such "numbered particularly named" process. Certainly, what one can do with bank savings accounts he can obviously do with bank demand deposits.

Claims 1-11 and 16-24, as apparatus claims, are treated next. Such claims stand rejected under 35 U.S.C. 102 as being anticipated by Hopper et al, Tink et al, Dirks or Best et al.

Appellant admits (1) that his so-called apparatus system is defining process steps in the means-plus-function format (see page 47 of the Appeal Brief) and (2) that the cited prior art general purpose computers are capable, structure-wise, of carrying out his invention, i.e. a computer program (see Page 41 of the Appeal Brief). In the face of such admissions, it is inconceivable that the appellant can contend that the structure of the cited references does not anticipate what he is claiming. It is again emphasized that appellant has not cited any specific structural elements of his "best mode" (i.e., the programmed IBM 1400 computer) which are correlated to his individually claimed "means". It is noteworthy to indicate that the IBM 1400 computer can assume a variable number of configurations in dependence upon the needs of the particular customers. No structural elements not shown by the cited references are found in appellant's claims.

Appellant's citation of *Prater and Wei*, 162 U.S.P.Q. 541 (1969) as authority for his position is considered without merit. What was said by the court relative to the operation of a programmed general purpose computer was dicta for such operation was not an issue in that case.

As for *Bernhart and Fetter*, 163 U.S.P.Q. 611 (1970) what is discussed therein is not pertinent to the present issue involved herein. The issues involved in such case dealt with statutory subject matter and a method for the use of a planar plotting apparatus. No such issues appear in this Appeal.

Appellant's claimed "system" cannot operate wholly without human intervention because of the need to initially manually fill in the transaction records either by the

bank's customer or the bank teller, the need to insert the records into a reader and the need to generate individual output reports on a monthly basis.

Appellant's machine readable records are only a small part of the invention he seeks patent coverage for. *In re Jones*, 153 U.S.P.Q. 77, was cited by appellant in support of his machine readable records, but such case was directed to a disc (structure) with etched markings on it that activated a photocell, and is therefore considered not pertinent. Appellant's whole invention is a program, written in the form of symbols, and it is intended that such program convey intelligence to any one reading it.

2. *Rejections Under 35 U.S.C. 112*

Appellant's own admissions that his total invention is a process, in the form of a program, that directs a general purpose computer system through a series of steps should negate any contention that he should be entitled to structure claims (i.e. Claims 1-8, 10, 11 and 16-24). Also, Appellant's late submission of process claims 25-27 by Supplemental Amendment is taken as another indication that the proper format for his claims would appear to be the method type claim, as a possible new use for a known machine.

Ex Parte Lewis, 154 U.S.P.Q. 487, which was cited by the appellant, was directed to method claims drawn to the function of an apparatus. Such decision did not uphold "the patentability of machine process claims for computer inventions embodiable in the form of software computer programs" as appellant would have us believe on Page 54 of his Appeal Brief.

The Appellant's argument with regard to Claim 9 is considered untenable for the imprinting "input device" claimed therein can reasonably be considered as structure.

In *Bernhart and Fetter*, the question of the sufficiency of disclosure of that application under 35 U.S.C. 112 was not before the court as it is here. Also, in such

case, no holding such as "a software computer program for—is a physical control device and is properly expressed in apparatus form in means-plus-function language" (see Page 57 of Appellant's Appeal Brief) appears therein, as appellant argues. In the representative structural claims in *Bernhart and Fetter* (i.e. Claims 18 and 19) words such as "electronic signal data processing means—programmed" and "electronic digital computer means programmed" are far different than claiming a software computer program in means-plus-function language.

Concerning the appellant's failure to particularly point out and distinctly claim the subject matter which appellant considers as his invention, his failure to indicate in his disclosure what structural parts of the IBM 1400 system he considers for his individually claimed means is considered sufficient to sustain the rejection of Claims 1-8, 10, 11 and 16-24 under 35 U.S.C. 112.

The blocks in Figs. 6, 7, 8 and 9, referred to on Page 57 of the Appeal Brief, are flow charts setting forth particular routines of appellant's program.

The technical and manufacturing problems raised by this Examiner as being associated with the building of a computer, and dismissed so lightly by the appellant as "within the skill of the art to handle", are very real and highly important to the producers of such structural computers. Many computer configurations, designed "on paper", prove unfeasible or inoperative when reduced to structure.

Should one carry the supposed meaning of *Bernhart and Fetter* decision to a natural conclusion, the number of "physically different" machines appears determined by (1) the length of the program being used on a particular computer multiplied by (2) the number of steps required for each instruction in completing the processing required by that program. The enormity of determining what structure the computer may consist of at a particular thousandth of a millionth of a second (their present operating speed) should be obvious from such conclusion.

SUMMARY:

In view of the above rebuttal of appellant's arguments, when considered with the incorporated Final Rejection, it is submitted that (1) Claims 1-8, 10, 11 and 16-24 do not particularly point out and distinctly claim the subject matter which the applicant considers as his invention nor are such claims in the proper type of claim format as required by 35 U.S.C. 112 (2) Claims 1-8, 10, 11, and 16-27 are anticipated under 35 U.S.C. 102 by prior art. Accordingly, it is submitted that the rejections of the aforementioned claims be upheld and the appellant be denied patentability for any of the submitted claims.

/s/ Paul J. Henon
PAUL J. HENON
Group AHT Unit 237

Conf: P. J. Henon
G. D. Shaw

United States Patent Office

825 3,343,133
Patented Sept. 19, 1967

1

3,343,133

DATA HANDLING SYSTEM

Gerhard Dirks, 12120 Edgecliff Place,
Los Altos Hills, Calif. 94022

Filed Aug. 9, 1963, Ser. No. 300,962
23 Claims. (Cl. 340—172.5)

TABLE OF CONTENTS

CONTENTS

Column

1. Objectives, Applications and Objects of the Invention 3
   A. General 3
   B. Reference Files 8
   C. Operative Files 11
      For Planning, Control and Up-Dated Reporting:
         In Production Planning and Control 13
         In Financial Bookkeeping 17
         In Cost Accounting; Budget and Standard Information 18
         In Sales 19
   D. Interdepartmental and Interorganizational Communication 21
   E. Objects 24
2. The Drawings 27
3. Definitions 34
   A. Binary Code 34
   B. Times and Clocks 36
   C. Format 38
   D. Interlacing 39
   E. Group Control 40
4. Principal Features of the Invention 43
   A. Introduction 43
   B. Transfer of Information From One Dynamic Storage to Another 43
   C. Transfer of Information Between Exchangeable Dynamic Storages 45
   D. Transfer of Information To and From a File 46
   E. Rearrangement of Information; Various Arrangements of Information in Dynamic Storages and Access to Such Informations For Transfer 47
   F. Dynamic Storages 53
   G. Time Slot Changing Device For Transferring Information From One Dynamic Location to Another 53
   H. Controllable Transfer of Information With Synchronism of Operable Drives 57
   I. Controllable Transfer of Information Between Static and and Dynamic Storages 58
   J. Controllable Transfer of Information From an Asynchronous Input 59
   K. Transfer of Information With Controllable Input and Output 60
   L. Simultaneous Processing of Information With Parallel Means 61
   M. Time Shared Simultaneous Processing of Information With Parallel Means 63
   N. Simultaneous Multichannel Terminal Input and Output 66
5. Introduction 67
6. Basic Components of Data Handling System 68
7. Data Sorting and Merging 68
   A. Basic Components of Sorting and Merging System 68
   B. Sorting of Information Units in Groups of Sequential Order 71
   C. Plurality of Channels and Cyclic Presensing and Transfer of Data From Input File to Output File 75
   D. Presensing and Transfer Control Stations 77
   E. Sorting and Merging System 78
   F. Assembly Tracks and Heads 91
   G. Assembly Tracks Coupled to the Main Shaft 92
   H. Sorting, Collating, Selecting and Duplicating 93
   I. Crosswise Tape Sorting and Collating 95
   J. Selected Sensing and Transfer From Assembly Tracks 96
   K. Assembly Track Loading 98
   L. Sorting Timetable 100
   M. Control Unit for Recording and Sensing of Sorting Word 103
   N. Comparing and Buffer Arrangement 108
   O. Presensing and Transfer Control of Variable Information Unit Lengths 113
   P. Sorting of Information Units in Groups of Sequential Order 120
   Q. Group Lengths after Runs 124
   R. Group Length Control 125
   S. Merging and Sorting Speeds 126
   T. Crosswise Tape Recording and Sensing 128
   U. Combination of Sorting and Merging With Serial Drum Computer and Comparing Registers 129
8. Stepwise Track Switching 130
9. Storage to Sorting Track Clearing 131
10. Asynchronous Input of Information Units With Limited Buffer Capacity and Rotatably Switched Heads 131
11. Sorting and Merging—Interlaced—Fixed and Variable Information Unit Length 132
   A. Introduction 133
   B. Interlaced Storage of Information Units 136
   C. System for Transfer of Data Under Control of Selected Fields of Information Unit 137
   D. Sorting 140
   E. Field Delay 143
   F. Sorting of Information Units With Variable Lengths 146
   G. Presensing Control 147
12. Sorting and Merging—Fixed Information Unit Length 151
   A. Group Storage of Input-Output File 152
   B. Presorage 154
   C. Track and Group Switching Control 155
   D. Track and Group Selection Control 156
   E. Presensing and Transfer Storage Control 158
   F. Comparator Control 159
   G. Signal Generator 162
   H. Information Unit Selector 163
   I. Keyboard For Field Selector 165
   J. Field Selector 14

2

Column

   K. Delay For Sorting Fields 166
   L. Buffer and Storage Revolver 166
   M. Comparator 167
   N. Sorting Group Control 168
   O. Reassembling Revolver 169
   P. Reassembling Revolver Control 170
   Q. Sorting Tables 172
13. Data Handling System 174
   A. Data Handling System 174
   B. Selection of Fields and Preparation of Sorting Word 174
   C. Data Flow 175
   D. Dynamic Two Way Comparator 178
   E. Field Selector Control 179
   F. Static Comparator 180
   G. Field Revolver 180
   H. Field Justifier 180
   I. Field Positioner for Field Revolver 182
   J. Buffer and Storage Revolver 183
   K. Field Positioner for Field Justifier With Respect to the Sub-Bit Clock 183
   L. Dynamic Three Way Comparator 183
   M. Presenting of Information 184
   N. Sensing of Program 184
   O. Controllable Delay Line 185
14. Arithmetic 186
   A. Arithmetic Unit, First Embodiment 186
   B. Arithmetic Control Unit; First Embodiment 203
   C. Addition and Subtraction 207
   D. Arithmetic Unit; Second Embodiment 210
   E. Arithmetic Control Unit; Second Embodiment 212
   F. Addition 212
   G. Addition With Filler in Non Decimal System 214
   H. Subtraction 215
   I. First Multiplication Process 216
   J. Second Multiplication Process 216
   K. First Division Process 219
   L. Second Division Process 221
15. Input and Output System 223
16. Synchronization of Delay Line With Rotating Memory 224
17. Random and Sequential File 226
   A. General 226
   B. Address System 231
18. Auxiliary Magnetic Memories—Magnetic Record Card Sensing and Recording by Discs 232
19. Asynchronous Input 238
   A. Transfer From a Plurality of Inputs 238
   B. Transfer to a Rotating Storage 238
   C. Asynchronous Input and Multichannel Terminal 240
20. Multichannel Terminal 242
21. Multiplex Input 244
22. Unlatched Keyboard for Multichannel Input 250
23. Flexible Discs 252
24. Offline Printer 253
25. Core Storages 256
26. Two Way Comparator 264
27. Three Way Comparator 270
28. Sorting in Groups of Tracks 272
29. Miscellaneous 273
   A. Presensing and Transfer Control 273
   B. Variable to Fixed Field Shifting Arrangement 273
   C. Data Handling Arrangement 273
   D. Control Delay Lines 273
   E. Random and Sequential File 274
   F. Arithmetic Unit 274

CHARTS

I. Reference File Records for Production Planning and Control—Order Schedule and Bill of Materials for Final Assemblies 10
II. Reference File Records for Production Planning and Control—Bill of Materials for Sub-Assemblies 11
III. Reference File Records for Production Planning and Control—Operation Schedule for Parts 11
IVa. Operative File Records for Production Planning and Control—Planning Information Survey 13
IVb. Operative File Records for Production Planning and Control—Planning Information for Parts Requirement Availability 14
IVc. Operative File Records for Production Planning and Control—For Facilities Requirement Capacity 15
Va. Operative File Records for Production Planning and Control—Control Information For Floor 16
Vb. Operative File Records for Production Planning and Control—Control Information for Machine Shop 17
VIa. Operative File Records for Financial Planning and Control—For Payments to be Made 18
VIb. Operative File Records for Financial Planning and Control—For Payments to be Received 18
VIIa. Operative and Up-Dated File Records For Budgetary Planning and Control 19
VIIb. Up-Dated File Records-General Reports for Summaries and Variances 19
VIIIa. Operative File Records for Sales Planning and Control—Serial Mass Production Business 20
VIIIb. Operative File Records for Sales Planning and Control—Sales Promotion (Control) 20
VIIIc. Operative File Records for Sales Planning and Control—Planning and Control of Inventories 20
IXa. Operative File Records for Sales Planning and Control—In Single Order Business 21
IXb. Operative File Records for Sales Planning and Control—Survey of Orders 21

TABLES

		Column
I.	Binary Code	34
II.	Binary Alphabet Code	34
III.	Formats	39
IV.	Positions of Interlaced Information Units	40
V.	Three Way Sorting, First Run	73
VI.	Three Way Sorting, Second Run	76
VII.	Sorting Timetable	101
VIII.	Sorting by Collating	130
IX.	Group Lengths	174
X.	Merging and Sorting Speeds	198
XI.	Trigger Stored Binary Code	189
XII.	Field Justifier Operation	193
XIII.	New Instruction Control of Arithmetic Control Unit	204
XIV.	Control of Result Selection in Arithmetic Control Unit	205
XV.	Carry in Arithmetic Control Unit	205
XVI.	Multiplication Process	217
XVII.	Division Process	219
XVIII.	Address Counter Operation	231
XIX.	Printing Operation	254
XX.	Two Way Sorting Group Length	272

The present invention relates to a data handling system. More particularly, the present invention relates to a completely dynamic electronic data handling system.

(1) OBJECTIVES, APPLICATIONS AND OBJECTS OF THE INVENTION

A. General

It is the principal objective of the present invention to provide high performance means at low cost for keeping up-dated and for processing selectively data stored in large capacity memories. In order to have a reasonably small access time to such data, such large capacity memories may be preferably rotating disc file memories. Special applications for such operations are all planning, control and decision making functions in which the effective execution of these functions has to be based on daily, hourly, or other short term up-dated data of great volume, from which only selected fractions of sequences of such data are required in a given situation. Therefore such data must be rapidly retrieved and used in speedy, repetitive rearranging and other processing operations with the possibility of immediate human intervention to achieve effective decisions based upon evaluated facts and such decisions may have again rearranging and processing influences on other data to be determined in first operations and selected in a similar data retrieval manner and rearranged data may be inserted into the old or other data within their new sequence condition. But the combination of sequential data recording with random access to sequences of such data is also extremely useful for simple up-dating of such sequential type of data in short cycles such as, for example, hourly or daily transaction, of which the print-out of detail data with newest sums and balance forwards may be accomplished with economy only in longer time intervals, such as weeks, several weeks, or months, and in which in exceptional cases an instantaneous access to sequences of records collated together under one reference (account) number with read or print-out of these information units is required, such as in ledger type bookeeping or cost accounting.

The systems applications used until now for such purposes can be classified into three categories. The first category of systems applications is the "tape file-core memory" approach in which information units of data are stored in sequence according to their coordinated key field words, for example, in their ascending order sequence, and in which constructive information units stored in sequence on such tapes may be transferred in one continuous movement into the inner core memory of the computer. Reels of such tape files are exchangeable and tape drives permit stepwise moving of the tape for sensing or recording.

The second category of systems applications is the "random access file" approach, in which information units of data are stored in a random sequence according to their coordinated key field words preferably in a disc file, and in which, basically speaking, during one rotation of such file, one single random-wise addressed information unit is transferred to the inner memory, for example, the core memory of the computer.

The third category of systems applications is the "tape file" plus separate, additional "random access file" approach, in which in addition to the solution of the first category, a random access file is provided to keep in each "master file" data.

The solution of the problem described as the first category has the advantage that similarly to a punched card system all the detail and summary data related to each other are recorded adjacent to each other by preceding sorting and merging operations and it permits the handling of large file volumes by the exchangeability of sorted tape files. It has a disadvantage due to the effect of such operation being highly dependent on the fraction ratio between the information unit data of such tape files used for the processed transactions and the total volume of data stored in such files, since a low matching ratio results in long idle passes of the tape over unused information units. While the processing of historical data in long, for example, monthly, intervals provides in general reasonable matching ratios so that tape processing is economical, a good deal of the speed of the computer ability is wasted by the idle pass conditions at the input, if control, management and other decision making functions, in planning daily or hourly or similar short up-dating, combined with rapid retrieval cycles out of larger volumes of data, are required. This is especially the case if computers are to be used for operations which require volumes of data, but which permit, for example, only short reaction times.

The random file approach of the second category eliminates these difficulties by the known random-wise information unit operation, in which during one rotation of a disc file, single information units may be selected. This process is considerably advantageous under the indicated short-term up-dating and retrieval requirements for single information units.

The solution of the third category is generally in all those cases of advantage where either inquiries are to be obtained in short time retrieval periods, and in which such inquiries are based upon preceding tape type operations, or where file data are to be used repetitively for various purposes in data processing but are to be kept available in up-dated form only once for the purpose of convenience.

The combination of solutions does not eliminate the disadvantage of the tape file system of the first category if sequences of information have to be selected rapidly and are to be rearranged, merged and processed similarly to a tape system operation, but under selective retrieval conditions. For such operations it is therefore essential for an effective use of a computer to use a technical system approach, which combines directly, in an integrated manner, the advantages of sequential operations of tapes with the random access to sequences of such information data in files.

Therefore, the system of the present invention combines the advantages of tape functions and disc file functions in an integrated form by performing directly within the file system sorting and merging functions with information units and arithmetic functions for selected fields of such information units stored within the disc file system. Consequently, in the system of the present invention, the files have not only the character of master and of reference files, but also of transaction and processing files. Similar to other data handling systems, the transactions data themselves may include only a minimum of required data during the first processing steps and may be supplemented by alphabetic and other data from a reference file during following processing steps of operation.

Reference data is recorded on a reference file (AI of FIG. 1) as hereinafter described and transaction data such as planning, control and report data is recorded on an operative file (BI of FIG. 1) as hereinafter described

and these data are recorded in the first category solution on tapes. The solution of the second category refers primarily to reference data since it is limited by the non-availability of sorting and merging functions within existing file systems. Systems in the third category preferably include the reference file (A1 of FIG. 1) data in random access files and the operative file (B1 of FIG. 1) data, which require sorting and merging, in tape files. The proposed systems integrates all the data into random accessible files by providing sorting and rearranging of data within the file so that the random access is available to sorted sequences of data for operative file systems similar in sequential operation to tapes but with random access.

Since one of the economy factors of tape usage is the increase of file volumes resulting from the exchanging of tape reels of sorted information unit data, arranged, for example, in sequential ascending order of their key fields, exchangeable random access files, that is, for example, exchangeable disc files storing sequentially sorted information data, are considered preferably as part of the system.

Since a great deal of computer time is often wasted in operations in which the real potential of the computer is scarcely used such as, for example, most of the file maintenance, up-keeping the newest balances, etc., combined with merging and searching functions, an object of the systems approach of the present invention is to provide inexpensive file oriented computers with high performance rates, especially for sorting, merging and certain arithmetic functions.

The arrangements of the present invention therefore permit, in addition to their other potentials, a more profitable use of the real power of a big computer by eliminating from the computer operations all the simple, but time consuming, operations for which the computer time is too valuable, such as preparing and follow-up of input or output gears with the buffer operation of buffer files. High performance rates for sorting and merging, together with certain arithmetic operations for file handling operations, are achieved by using, as basic elements, cyclic dynamic file systems with low costs per stored bit, at high bit rates. In the cyclic dynamic file systems, a program controlled sorting, merging and other processing of information unit data is accomplished directly within the file system during the transfer of such data from one file storage location to another.

This permits far more efficient and economical as well as simply programable solutions than the conventional tape-core approach in the cases of the handling of administrative type of data, since the emphasis in this type of application lies, in most cases, more on the access to file data and the transfer of data in rearranging, merging, searching, and transfer functions than on complicated mathematical functions in which a given rather limited volume of data is repetitively used with random requirements of access to digits and words in microseconds.

The streaming mode or continuous data flow approach for this type of operation, which forms the basis for the system of the present invention, is in this case especially advantageous since it is incorporated directly in the file system so that it adds only limited additional costs to the cost of the file system itself, the cost of the file system being imposed anyway due to the need for random-sequential access to currently up-dated and rapidly accessible information units. This is especially so, since the only type of larger mathematical operations required in the administrative type of applications is in the field of matrix operations for linear programming and similar functions. This type of operation is also a special streaming mode type of operation in which series of calculations are performed at matrix members in certain determined sequences with large quantities of file data so that the economical high speed technique of the streaming mode is well applicable to this type of operation.

The modern development of the components makes this systems approach especially attractive, since the use of dynamic storages in the form of delay lines permits an ever increasing speed improvement with inexpensive means in direct cooperation with dynamic file systems, operative in parallel and multiplex use of data transfer and processing channels functions. The computer potential may be thereby greatly improved for administrative operations.

In this type of application and operation, the performance to cost ratio is further greatly improved by the combination of sequential operation with random access, which eliminates the cost for the waste of idle-run or stand still of a plurality of expensive tape drives, and by synchronously and continuously moving recording areas relative to sensing and recording means, which eliminates the start-stop movement of record carriers to signal heads in the sensing and recording direction.

The elimination of the start-stop movement and the continuous synchronous movement of the file relative to the signal heads eliminates the necessity for first transferring selected data from a first stepwise moved record carrier to a static memory to bring them, for the purpose of processing, together with selected data of a second stepwise moved record carrier, before they may be transferred to another stepwise moved record carrier. The eliminated transfers not only add the cost of an expensive large inner random accessible storage system, but, with the present day's components performance, lose speed if the internal, repetitive use of internally stored data is limited and if the total transfer determines the overall speed.

It thus becomes possible, as hereinafter described, that computers with high performance will become available also for medium size and small business and for individual departments and operations of larger corporations communicating with each other in a network.

The administrative type, file-oriented computers with considerable file capacity may be built in desk size, and they themselves may function as a center of several subterminals, thereby forming powerful satellite systems with their own processing abilities.

A further essential factor in obtaining the same or an even better performance of this type of computer as compared to a computer of the tape-core approach is the availability of an inexpensive file type memory in a size containing all the data required for the processing of a given problem. In desk size or departmental machines, an inner storage of about a one to four time multiple of 16,000 recorded information units, or 2 to 8 million characters, with a number of independent stepwise operable signal head movements, may be provided, operating within the same file system where each such drive in cooperation with the storage surfaces replaces for this size of record volumes the function of an independent tape drive.

The same system, in which a number of stepping mechanisms, at least four, are provided, to permit sorting, merging, arithmetic processing during the transfer of data from one storage location to another, may also be very profitably used in large file systems or in smaller systems, increasing their efficiency and usability in a high degree, since they can perform the tape functions with the additional advantage of random-sequential integrated operations. The recorded information units within a track are then, similarly to tape operations, sorted and merged in a sequential order of their key fields in tracks or within groups of tracks of a disc file system, which form a vertical arrangement of tracks and which have individual signal heads located in one step movement location of signal heads over each group of tracks. The groups of tracks, together with consecutive groups of tracks, may in turn be part of a file storage for key field sequentially arranged information units.

There may be two or more input or output channels operative at the same time within the same set of discs

with independent stepping mechanisms for signal heads having equivalent functions to channels having several functions of input and output tape drives. They are far less expensive than tape drives and provide the additional advantage of random sequential access. This permits the completion of all the sorting, merging and arithmetic functions required for a given operation without any change of reels of tapes, etc. The results may be transferred to exchangeable disc files or other output means. The input data on such inner main storage may likewise be compiled from exchangeable disc files or other input means. Other steppers, additionally positioned in the file above the disc storages, permit the acceptance of input data from various input terminal sources, with time shared storage and multiplexing means. Thus, the updating of data for production, floor, shop, store, scheduling, receiving area, purchasing and cost accounting may be continuously affected by this part of the file with short time cycles of sorting and merging-in of such data in coordination with the other data. There may also be a link to archive type files for input and output.

Other steppers may provide storage areas for independent print, display and other output, and storage areas for interdepartmental communication.

Register tracks for tabulating, and other arithmetic, editing and similar functions may be provided, as well as program and format tracks for selective operation of programs for various record formats and various processing functions.

The cooperation of the cyclic storages with a hierarchy of higher speed delay line, small static, or other registers, permits the performance of most of the known computer functions at excellent performance rates at low cost. The interlaced, multiplex use of the storages and components permits the attainment of high performance rates by simultaneous serial operations instead of the sequential program selection and processing functions of large core memory-operations.

A principal objective of the present invention is to provide personalized computers with personalized files within the area of responsibility of decision, in which all the data which have otherwise to be communicated between a complex central multiplex operation with terminals or by print, can be stored directly in the machine language of the file, eliminating unnecessary print-out, since the file is sorted in the same manner as a tabulating list. Thus, in this type of personalized operation, the operator has random sequential access to the listing of data required at any time for video use in an individual case by inserting the corresponding exchangeable file into the system, if it is not yet in, or by transferring this information to other places. It is of great advantage that the data are already directly available in machine processable form instead of only long print-outs. A print-out is generally only required for summary and exception data and for other such sequences of records as are required for video use.

An object of this invention is therefore to provide a complete satellite system of smaller personalized computers, in which a group of smaller computers cooperate with each other in a wire network for the exchange of data required at other places but in which there is a great deal of flexible, individual control over the files, responsibility for the file data and their processing and the time schedule of such computers. This does not prevent programming assistance from a central method center, but it eliminates a good deal of the complexity of the data handling of the machines in the center and permits the building of the satellite computers with simplified, administrative type programs. This leaves a good deal of incentive, interesting and responsible operations within the various managerial levels of companies, according to the principles of multiple management and management by exception.

Some operations for which random-sequential systems are especially useful are described by the following examples.

B. *Reference files*

FIG. 1 is a survey, in block diagram form, of the handling of data in reference and operative files for information units (records) referring to planning, control, and various up to date report periods and their relationship to each other. Charts I to IX illustrate details of the information handling illustrated in FIG. 1. FIG. 1 is a diagrammatic presentation of two types of file operations, named for the purpose of this description the "reference file" A1 operation and the "operative file" B1 operation.

The reference file A1 comprises reference records for the assembling of detail information or records A3*a* and A3*b* and detail information or records A4*a* and A4*b*. The reference records may comprise groups of records often used for decision-making functions, and indicated as group A3*a* and groups of records rarely used for such functions, and indicated as group A3*b*. Similarly, the detail information or records may comprise often used groups of records A4*a* and rarely used groups of records A4*b*.

Depending upon the volume of information units and on the ratio between often and rarely used items, different types of file storages may be used for often and rarely used data, as hereinafter described, if this permits still more economical solutions (see FIGS. 55 and 56). The reference records A3*a* and A3*b* for assembling detail records and the detail records A4*a* and A4*b* themselves may be updated by introducing new supplementary records A5*a* and A5*b* for assembling of detail information to replace old records A6*a*; the old records concerning, for example, parts which are no longer used due to obsolescence, for detail informations A6*a* and A6*b*, respectively.

The reference records usually contain two or three types of information. One type of information may be information which is required for rearranging, merging, searching and arithmetic, which may be devoid of interpretative information and may be only of a short digital type and used during the major part of the processing. A second type of information may be interpretative information which is required or useful for human communication and interaction and which is stored as a sequence of coordinated character sequences in bit form. A third type of information may be video and/or other information related thereto such as, for example, drawings or explanations.

Although in many cases the major part of the processing may be accomplished internally with shortened records of the first type of information, intermediate or final results often require supplementary information from the reference file of the second type of information, or of the third type of information.

Records shown in the following examples in the form of a vertical distribution pattern for days, etc. may be accumulated into various report periods such as, for example, weeks, quarters of years, etc., and may be placed in horizontal fields of records or information units if such records have identical key fields.

The splitting of file handling into groups of informations or records may be used in various ways. First, it is obvious that the file records will usually keep separately various types of records, which include different types of information and may therefore not be sorted according to identical key fields or key field combinations in an ascending or descending order. Within such correlated types of information units, provisions for a split may be made by identifying selected records of such information units by special marker code. The selected records may indicate, for example, items which are known to require special attention, due to their high value, their critical supply condition on the market, special difficulties in production or sale, or due to their design and probability of alterations, etc. On the other hand, the information units may be identified by the computer operation itself, such as certain variances from given standards or budgets. These records or information units may indicate, for example,

items behind schedule, overdrawn, overdue, above or below, over or understocked plan, out of intended sequence, etc.

In planning and control operations, provisions for a split may also be made between information units or records for the established or the basic plan or control schedule; records with new evidence, which apply or may result in modifications of the established or basic plan records; selected records of the established or basic plan group which may be used in several tentative or conditional runs and rearrangings to determine the optional reaction to the new evidence records; and modification records for the established or basic plan group, which are supplementary to the records of the established or basic plan group and are therefore utilized automatically in addition to the basic plan group. This may be effected by a mark in the basic plan group records, or, if they are not voluminous, by a search operation for modification before the basic plan group records are used.

For the purpose of simplification, the up-dating of the basic plan file by the modification records by merging them with the basic plan file may be accomplished only in determined intervals such as, for example, days, weeks or months, dependent upon the prevailing conditions, but the requirement of complete up-dated usage of the file system is achieved by the automatic combination of the basic plan file and the modification file. In simple up-dated file operations such as, for example, ledger files for personal accounts, accounts receivable and payable provisions, a split within the file system may be made between records sorted according to key fields, representing, for example, account numbers, on a daily basis, and merged into the monthly transactions, which are printed out as statements at the end of the month, and including as latest balance the balance of the end of the last day, but permitting, if required, random access to the detail information assembled up to date for the particular account number. The split may be randomwise, according to timely occurrence such as, for example, recorded transactions of the day, tested in case of an inquiry for detail information for information sorted according to key fields. If information is additionally requested, the split may be of one short record per account number, including but a few informations, in addition to the account number and latest balance, comprising sums and balance, such as indicators for overdrafts or other conditions requiring special attention or special operations, but having no accumulated detail information for the period not yet printed out. The split in the file operation may also be used for automatic auditor trials in ledger file processing, as hereinafter described in detail (the description for FIGS. 139, 140 and 141).

This type of splitting of the file operation permits the observance of all management rules, which are generally determined by the principles of multiple management and management by exception. Reference records may be used for various operations such as, for example, as search records for random files to determine the location of detail records in index search operations. In its simplest form, this may be accomplished by short key and location identifier records. The search may be broken down into one and more steps, a first one, which may include a selection of all key fields concerned, and an additional operation for selecting the desired key field combination. Reference records may also be used as reference records in random-sequentially oriented files in which the indexing may refer only to sequential record groups or key field indexes for the first record in a track or in a combination of a group of tracks. Another use for reference records is as reference records in random-sequentially oriented files, in which selected ones are used to build up with other reference or detail records new sequences of groups of records, thereby producing newly composed sequences of records including digits and text for ordering, scheduling, reporting, etc., for example, with eventually a number of levels of report producing and alternation. Various examples are illustrated in Charts I to IX.

Detail records may be used in such files either as single random-wise located records in random files, or as sequentially sorted records, which are sorted and merged into groups of key field numbers. The sequentially sorted records may comprise, for example, ledger type information collated under account numbers for later up-dated print out, but with available random access during the collating time period. The sequentially sorted records may comprise bills of materials or operation plans, and may comprise scheduled sequences of information units for production, purchasing, financing, cost accounting, sales forecast and controlled sales promotion, etc., as illustrated in greater detail in the examples presented in Charts I to IX.

The use of the reference file may be illustrated by describing the reference and detail records in a production planning and control operation. The reference information for the planning and scheduling required to produce the requirement of material, manpower, equipment and tools, broken down into time periods, and to check such requirement with available stock on order, manpower and equipment capacity available, and to adjust both requirement and availability of coverage in a continuous feedback loop system, may be shown, for example, for a product consisting of sub-assemblies and parts (Chart I).

CHART I—REFERENCE FILE RECORDS

[For production planning and control order schedule and bill of materials for final assemblies]

Type of Information Unit (abridged):		Must Be Available Time Units (e.g. days) Before Shipping Day
Order Number	2 Products of 1460-210	
Assembly, Shipping Day:	(19) 63-202	
Main Unit Number (consisting of:	1-273,426,000.01	
3 Pieces Sub-Assembly Number	034.216-210.05	30
1 Piece Sub-Assembly Number	016.324-120.03	30
2 Pieces Sub-Assembly Number	036.215-080.01	20
3 Pieces Part Number	127.336-012.02	10
(+)1 Piece Part Number	New Number	20
(−)2 Pieces Part Number	127.316-010.04	—

The product may include, as Chart I shows, the main standard features (273,426-000.01) consisting of:

3 pcs. sub-assembly number 034.216-210.05
1 pc. sub-assembly number 016.324-120.03
2 pcs. sub-assembly number 036.215-080.01

The product may also include, as optional features:

3 pcs. part number 127.336-012.02

and as a special feature:

Plus 1 pc. new item part ..... New number

instead of:

Minus 2 pcs. part number 127.316-010.04

The standard time schedule indicates that sub-assemblies 034.216-210.05 and 016.324-120.03 must be available in the final assembly area 30 time units (for example, 30 days) earlier than the assembly completion or shipping day. Sub-assembly 036.215-080.01 and the new part must be available 20 time units earlier, and part number 127.336-012.02 must be available 10 time units earlier, in order to guarantee delivery "on time."

11 12

CHART II.—REFERENCE FILE RECORDS

[For production planning and control bill of materials for sub-assemblies]

Type of Information Unit (abridged):	Design Status	Beginning With	Until
	.03	Serial Number.....	Serial Number.....
	.04	Serial Number.....	Serial Number.....
		Must Be Available Time Units (e.g. days) Before Assembly Day	
Sub-Assembly Number.....	034.216-210.05		
2 Pieces Part Number.....	216.014-034.03	15	
1 Piece Part Number.....	632.134-012.01	18	
5 Pieces Part Number.....	337.216-137.04	15	
3 Pieces Raw Material Number.....	7.316.214	10	
1 Piece Raw Material Number.....	2.136.116	10	
and so on			

The reference records for the assembling of the detail information indicates, as illustrated in Chart II, that

1 sub-assembly number 034.216-210.05

consists in turn of:

2 pcs. part number 216.014-034.03
1 pc. part number 632.134-012.01
5 pcs. part number 337.216-137.04
3 pcs. raw material number 7.316.214
1 pc. raw material number 2.136.116

and that its standard time schedules are 15 and 10 time units (for example, days) before completion of the sub-assembly.

The last two digits of the sub-assembly or part number may indicate the status of alteration in the design. Special references are to be recorded, which indicate until what time or up to which serial number such design is to be used, for example:

Sub-assembly 034.216-210.03 beginning with . . . until . . .

Sub-assembly 034.216-210.04 beginning with . . . until . . .

Sub-assembly 034.216-210.05 beginning with . . . until

systems requiring good reaction times and operating under the principle of management by exception.

Examples for planning and control are shown for the areas of production, finance, cost-accounting and sales, and for up-dated reporting for the areas of ledger files and other accounting data.

Operative File for Planning, Control and Up-Dated Reporting in Production Planning and Control

The use of the reference information records A3*a* and A3*b* of FIG. 1, shown in more detail in Chart II, and of the detail information records A4*a* and A4*b*, shown in more detail in Chart III, produces together with the production scheduling information A7, shown in more detail in Chart I, the first summary B4 of planning information in the operative file B1 by the selection and selective multiplication of the detail information for assemblies and parts B2 per assembly level, and by sorting and distributing such records to the planning periods B3. The scheduled times for planning periods are determined in this example by substracting the required standard lead time units (for example, days) from the shipping, calculated assembling or completion date of the assemblies or parts.

In the preparation of part requirements, and operation schedules, the 3 pieces of product 1460-210, which are

CHART III.—REFERENCE FILE RECORDS

[For production planning and control operation schedule for parts]

Type of Information Unit (abridged):		Title	Must Be Available Time Units (e.g. days) Before Completion
Part Number.....	216.014-034.03	Control Lever	
Raw Material	3.216.031	Steel Shaft (measurements and quality).	10
Operation 1—Machine group.	314.000	Turning (time required)	8
Operation 2—Machine group.	136.027	Milling (time required)	6
and so on			

Chart III illustrates the reference records for the details themselves, listing for parts which are to be manufactured the raw material and operations, namely for part number 216.014-.03. These are:

Raw material "steel shaft" 3.216.031 and measurements
Operation 1 "turning" on machine group 314.000 and time required
Operation 2 "milling" on machine group 136.027 and time required etc.

The standard time schedules may be 10, 8 and 6 time units etc. before completion of the part.

By means of the reference records, the input records for the individual schedule A7 of FIG. 1 develop the planning information units in the operative file B1. The scheduling records generally indicate, as Chart I shows, the number of units, which is 3, the order number, which is 1460-210, and the assembly or shipping year and day (1960-262, as well as the main, optional and special features hereinbefore described.

C. *Operative files*

The special advantages of random-sequential file handling become especially apparent in the processing of planning, control and up-dated report information in

to be shipped on day 262 (Chart I) will each require 3 pieces of assembly #034.216-210.05, 30 time units (for example, 30 days) before completion date. Therefore, 3×3 or 9 pieces of assembly #034.216-210.05 must be available on day 232 (day 262 minus 30 days). According to Chart II, the sub-assembly of each two pieces of part #216.014-034.03 requires 15 days for its completion, so that 9×2 or 18 such parts must be available at day 217 (day 232 minus 15 days).

Since the steel shafts required for the machining of the part control lever, 216.014-034.03 must be available 10 days before the availability of such parts for the sub-assembly (Chart III), 18×1 or 18 steel shafts must be available on day 217 minus 10 or 207, to meet these requirements.

It is evident that not everything in a plant follows the original scheduling, nor is the capacity used in the best manner or available at the right time for all such requirements. A flexible and adaptive planning and control operation therefore requires a constant feedback loop system B3 to B9 in the information retrieval and processing for the planning and control period. This requires, with a great amount of information 100 to 200,000 information units or records, even in a medium size operation, retrieval access to sequence of information records arranged se-

quentially according to assemblies, parts, departments, equipment, in scheduled periods, and it requires selection and rearranging of such information.

The automatic processing of the comparison of the requirements of parts, assemblies or tools, their availability in stock, supply by vendor or own shop and the comparison of required manpower and machine time and capacity for the various places of the shop and the floor will indicate in the summary B4 of the requirement and availability either the ability or the inability to perform the operation according to the intended schedule or an economic or uneconomic use of available capacities. This may be shown by greater positive or negative balances between requirement and availability for either assembled parts, tools, manpower or facilities for the periods calculated in quantities, and, as far as required in accounts.

The use of the random-sequential type of operation may keep the total of the preparation of requirements and scheduling of parts and operations in a current updated condition with the possibility of selectively rearranging fractions of such information without losing their mutual conditional timed relationship. This may also avoid the necessity for refunning the entire operation in periodic cycles as in data processing systems now utilized for such purposes.

The items in which greater differences occur are collected in special file storage areas and listed as exception detail information B5 and exception summary B6. These items require action, either by buying from other vendors, producing them in other shops, or by other facilities, using other material or parts or changing the time schedule. Effective planning and control requires the ability to first hold the change influencing information units in a separate area of the file system, in order to permit the evaluation of the consequences before they become effective. Until the best solution of the problem is found, a series of selective rearranging operations may be required.

Management games may be accomplished with selected information units within the loop of information B3 to B9. In the information feedback loop system a continuous adjustment to the occurring requirements is achieved with as small a reaction time within the feedback loop system as economically possible. The planning period may refer to a period of about one year or several months ahead, but the nearer the scheduling time, the more dangerous and difficult are the changes, and the more important is a small reaction time with rapid access to information and rapid processing. This refers also to engineering changes by new design A5 and obsolescence A6 information.

CHART IVa.—OPERATIVE FILE RECORDS

[For production planning and control planning information survey—Bottlenecks (exceptions)]

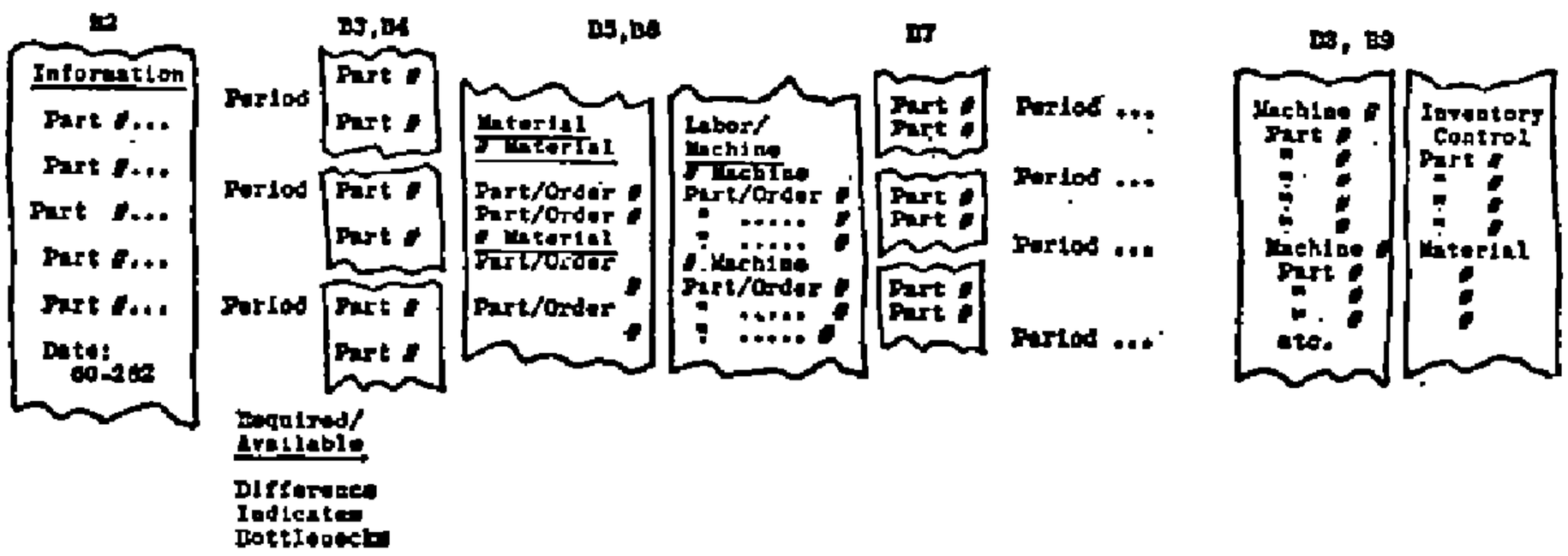

CHART IVb.—OPERATIVE FILE RECORDS

[For production planning and control planning information for parts requirement availability]

	Total	Variance Percentage	Periods (e.g. Weeks) 1	2	3	4	5	6	7	8	9	10	11	12	13
Part #															
Requirement															
Product/Source 1															
Product/Source 2															
Product/Source 3															
Product/Source 4															
Product/Source 5															
Product/Source 6															
Requirement Gross			Breakdown according to exception rules for "high value and other critical items" and any "missing," "overdue" or "surplus" items.												
In Stock															
Requirement Net															
Suppliers 1															
Suppliers 2															
Suppliers 3															
Suppliers Total															
Balance Forward															
Available															
Requirement Gross			Broken down, if required according to sources												
Withdrawal															
Variance															
Supplier, Promise			Broken down, if required according to suppliers												
Supplier, Supply															
Variance															
Part #															

CHART IVc.—OPERATIVE FILE RECORDS

[For production planning and control planning information for facilities requirement capacity]

	Total	Variance Percentage	Periods (e.g. Weeks) 1	2	3	4	5	6	7	8	9	10	11	12	13
Facility (Group) #															
Requirement															
Product/Source 1															
Product/Source 2															
Product/Source 3															
Product/Source 4															
Product/Source 5															
Product/Source 6			Breakdown according to exception rules for "high value and other critical items" and any "missing," "overdue" or "surplus" items.												
Requirement															
Total Capacity															
Balance Forward															
Available															
Facility (Group) #															
. . . . .															
. . . . .															
. . . . .															

Charts IVa to IVc present the preparation of information for production planning and the breakdown of the details for requirement and availability of parts, man and machine operations per period in vertical grouping of the details per time period or date. The hereinbefore described loop selectively up-dates, by its random-sequential operation, any information which requires a change and thereby up-dates the great quantity of information without the need for rearranging the total information in sorting and other processing operations. Thus, instead of complex rescheduling and up-dating, a constant follow-up of the existing conditions may be achieved, which results finally in a surveyed effective planning and control. The vertical information of Charts IVa, IVb, and IVc may be grouped into horizontal periodic report rows. The charts only indicate principals, not specific forms or detailed solutions.

The planning information for the month, weeks or days ahead B10 and the current survey of the day is basic information required for the control period. It uses the detail information for the control periods B11 (parts for the assembly floor, material and operation for the machine shop), checks availability and timing and controls the final release orders (claim checks for material and labor) and instructions to store and shop. The sequence of operations may be determined by sequence numbers. The automatic survey of the operations and material release permits sorting according places of operation B12 and automatic time correction under transfer of the dependent timing sequences into other time periods by addition or subtraction of time unit delays and rearrangement of the corrected records. Summary data B13 and feedback loop operation result in controlled release of the information B16 to terminals B15 in the storage, floor and shop areas. The control may be accomplished by machine identifiable claim checks, transport checks, etc., operation slips preferably released by tele-transmission for machine shops, assembly floors, and stores which in large operation may have small computer units of their own, to control and survey the performance of their operations B16, B17, B18, if this is not accomplished by the unit in the production control center.

Since every planning or control is only reliable if a constant feedback loop comparing planned and actual operation is established, a continuous comparison B17 between scheduled or intended performance B16 and actual performance B18 is provided. In the continuous comparison, there is continuously reported back in machine readable form information indicating what is performed by whom and where it is performed B19 and in which there is constant comparison of planning and performance data and any exception, in which plan and performance disagree, is automatically reported.

For the various types of managerial decision levels the current comparison between plan and actual reporting on variances in quantity or time, or multiplying quantities and times with standard costs, variances between planned and actual performance in cost figures may thus become available in any desired detail, in listings indicating summary and exception information for planned or budget, actual and variance figures B21 to B23. The report periods for the reports B20 may be cycles within the day, for example, hourly cycles, weekly or monthly cycles in dependence upon the type of information and the reporting levels concerned, and in dependence upon the importance of the variance B23.

With inventory control, the comparing information includes details of coverage (availability in stock and on order) broken down into periods and compared to requirement, comparison between individual vendor or shop promises and actual supply for the various items, and comparison between planned requirement and actual withdrawal of the various sources requiring such items. (See Chart IVb.) Special emphasis is given to the availability in time of parts for the assembly lines. (See Chart Va.) Units of the subcomputer units may be in the purchasing department or satellite system for ordering and follow-up and terminals or stations may be provided in the receiving area to permit continuous information feedback loops and to avoid late discovered shortages.

CHART Va.—OPERATIVE FILE RECORDS

[For production planning and control—control information for floor (sub-assemblies and assemblies)]

	Total	Periods (e.g. days/weeks) 1	2	3	4	5	6	7	8	9	10	11	12	13
Department.... per day.....year														
Product/Assembly #														
Total Plan up to day ±		Lists only "complete availability".												
Part # surplus deficiency														
Part # surplus deficiency		Lists only "high value and other critical items" and any "missing", "overdue" or "surplus" items. (exceptions)												
Part # surplus deficiency														
Part # surplus deficiency														
. . . . .														
. . . . .														
Product/Assembly #														
. . . . .														
. . . . .														

CHART Vb.—OPERATIVE FILE RECORDS

[For production planning and control—control information for machine shop]

Machine Group	Schedule Day	Schedule Periods beginning	Order #	Piece #	Title	Preceding Department/Tool Required	Operation Time Set Up	Operation Time Operation	Deliver To	Time Scheduled	Time Actual	Variance
#....	118	21										
....		22										
....		23										
....		24		Regular.								
....	814	25										
....		26										
		14		Listing separate out of sequence, "missing", "overdue" or advance item.								
		15										
		16										
Machine Group #....												
....												
....												

As indicated in Chart Vb for the machine shop scheduling, feeding the parts at the proper time to the proper place and automatic checking of quantity performed, scrap control, and feedback loop control for the completion of sequential operation may be achieved in cyclic computer operations within the day to permit the best possible production in the plant. Any variances are detected and reported and adaptive control decisions under human control or intervention are immediately possible.

As soon as the period of direct intervention is over, the daily informations, sorted accordingly, are merged day by day into weekly informations, and the weekly informations are merged into monthly informations, and summary and exception reports are made for various management levels and reporting cycles (B20 to B23).

Plan or budget figures B32, together with actual data B33 and variance data B34, with special emphasis on summary data B31 and exception data B36 are currently developed during the first history reporting period, preferably during the week or month (History period I). Summary and detail reports B31 and B35 may be provided for the next history period (History period II) in a conventional manner according to the requirements of analyses and availability B41, but with the capability of direct access to the information data in machine language for further processing, if required.

CHART VIa.—OPERATIVE FILE RECORDS

[For financial planning and control for payments to be made]

In Bookkeeping: Accounts Payable
Amounts to be Paid:
Period Due, Item Group 1 (e.g., Bottleneck Material .....)
Account #.....
Invoice ..... Date, Text, $.....
Invoice ..... Date, Text, $.....
Account #.....
Invoice .....
Item Group 2 (e.g., Other Material)
Account #.....
Invoice .....
$.....
Item Group 3 (e.g., Payroll)

Since there is a considerable difference in the different item groups with respect to the flexibility of the requirement for keeping the original intended due date for payments such as, for example, inflexibility in the date of payment of salaries, telephone bills, utility bills and special critical items such as bottleneck material, taxes, etc., a constant grouped survey with rearranging capability is highly desirable. It may be of the type shown in principle in Chart VIa. Individual discussion with vendors may in such cases require random-sequential access to accounting detail data. If automatic check printing is an included feature, considerable data transfer even in the very last days, may be required.

CHART VIb.—OPERATIVE FILE RECORDS

[For financial planning and control for payments to be received]

In Bookkeeping: Accounts Receivable
Amount to be Received, Has Been Received, Has Not Been Received, (Due Amounts Statements)
Period Due, Account #.....(Has Not Been Paid)

Invoice (A) Equipment	3-20-60	$.....	
Invoice (C) Equipment	3-26-60	$.....	
Down for Invoice	3-28-60	$.....	$.....

Account #.....
Invoice .....
Invoice .....

Other sequences for periods due may become necessary and daily up-dated data in collated "historic" random-sequential ledger file.

As Chart VIb indicates, similarly grouped informations with random access to sequential ledger type data may be of great value for the survey and follow-up in the area of the accounts receivable. Individual sales and financial discussions with customers, especially potential customers, very often require random-sequential access to such accounting detail data. If statements are to be sent out for the selected due amounts, customer service requires the updating of the figures including the latest received payments.

Operative File for Planning, Control and Up-Dated Reporting in Financial Bookkeeping

In principle, the same rules described for planning and control apply to financial bookkeeping. The bottleneck in the case of financial bookkeeping is money, rather than manpower, facilities, parts and materials, and it is of great importance since it is usually not available in abundance.

During the planning period, details for the financial budgeting require in general considerable rearranging of data as soon as investment for new facilities, changes in the production program or other projects of special consideration are to be performed.

Summary figures, derived from the normal data transfer may be used for general data, but a very detailed budgeting and observation of the actual data and of eventual variances, divided into periods, is required for the exception data. Very often, but especially in such conditions, there may arise during the control period a considerable need for rearranging of intended payments, even for general data items under human intervention or control.

Operative File for Planning, Control and Up-Dated Reporting in Cost Accounting; Budget and Standard Information

Modern budgeting and standard cost techniques require the ability to make flexible adjustments of given budgets under constant survey of the details of adjustments and variances and combining the basic budget or standard figures from which the data originates. This refers to the complete spectrum of budgeting and standard cost tech-

niques, with special emphasis on critical items in material, labor and overhead costs.

rest of the planning and control information within the entire business, especially in the area of production and

CHART VIIa.—OPERATIVE AND UP-DATED FILE RECORDS

[For budgetary planning and control]

Planning, Control — In Cost Accounting:

Summaries: Cost Item # Budget | Actual Data | Department # Variance | #..... Actual data in comparable or following sequential periods.

Report Information — Details: For selected items departments for detail explanation of summary figures if variances are too great or if comparison and other reason require detailed survey or controlling influence.

Cost of Product #.....

	Material	Labor	Tools, etc.	Overhead 1	Overhead 2	Total
Standard	—	—	—	—	—	—
Variance	—	—	—	—	—	—

Product #.....

For the various departments and product areas, the summary surveys for budget, actual and variance data, such as, for example, according to Chart VIIa, require for selected items, department etc. details for summaries or random-wise selected secuences of data forming the sum for summary surveys if required. This is required, for example, if variances are too great or if comparisons or other reasons indicate a necessity for a detailed survey or controlling influence.

rest of the planning and control information within the entire business, especially in the area of production and financial planning and control. It is an area in which computers can help management in a high degree to determine the direction to be preferably selected. Random access to sequential streams of data and their constant survey and rearrangement is of great importance.

The two extreme types of operation are sales of mass products or series of products and sales of single order products. Between the two extremes lies the wide variety of single order products, comprising serial order assem-

CHART VIIb.—UP-DATED FILE RECORDS

[General reports for summaries and variances]

Details in Various (2 or 3) Sorting Directions
Daily: Day 1, Day 2, Day 3, Day 4, Day5

Report Information

		Summaries	
Item #	Item #	Item #	Accumulated Totals
Detail (a)	Detail	Day/Week/Decade	
Detail (b)	:	Day/Week/Decade 2/	1 to 2
Detail (c)	:	Day/Week/Decade 3/	1 to 3
Item #	(similar to	Day/Week/Decade 4/	1 to 4
Detail (d)	day 1)	Monthly—quarterly	
Detail (e)		company reports with	
Detail (f)	Merged Into	comparisons for:	
	Week/Decade or	budget—actual—variances	
	(Decade/Month	actual in various comparable	
		periods	

Group Sum
Item #
:
:

The up-dating of report information is accomplished by sorting, as indicated by Chart VIIb. The daily activities are sorted to reference numbers, for example, and are merged either daily or weekly into daily or weekly up-dated files, merged again into monthly up-dated sequential files. The merging may be effected similarly in method to that utilized with tape files. With random access to sequences of such data, the data group beginnings or the track group or vertical arrangement of the track beginnings are indicated by index information stored within the file comprising the beginning of such groups for key fields and localities.

Operative File for Planning, Control and Up-Dated Report Information in Sales

The planning and control information technique used in the sales department determines to a high degree the

blies which require a combination of both systems for the sales and inventory planning and the control functions. The planning periods refer to trend forecasts for the year and longer periods and the breakdown of the year into the seasons within such years. Reviews and surveys with actual and other insights are constantly required within the year for detailed adjustment.

CHART VIII.—OPERATIVE FILE RECORDS

[For Sales Planning and Control]

CHART VIIIa.—IN SERIAL MASS PRODUCTION BUSINESS

Preview (Planning) of Sales and Revisions of Such Preview in Regular Time Periods

Period, Product, Area	Sales	Ratios for Trend and Percentage: Yearly Product Group:	Seasonal In Group:	Within Year:	Others Volume:	Estimated Prices &: Discount	Net Sales	Costs	Gross Profit	Percentage

(Revisions in time periods under control of sales offices of various areas and product sales departments)
(Require summaries with selected details)

CHART VIIIb.—SALES PROMOTION (CONTROL)

Period, Product, Area	Agent	Main Customers, & Consumer Groups Plan (Budget), Actual, Variance	Volume	Price	Discount	Net Sales

With feedback information influencing production planning and control and sales inventory planning and control.

CHART VIIIc.—PLANNING AND CONTROL OF INVENTORIES

Product, Area	Ratios Groupwise Turnovers:	Ratios of 2s:	Stock Sufficient for Periods: Plan, Actual, Variance	Lead Time and Others:	Requirement Plan Actual	Available On Order	In Stock

(See Chart Va)

The buildup of the planning figures as shown in Chart VIIIa requires a constant and periodic survey of the ratios for the trend of the product group, its assortment within the group, and for the seasonal curves and their thorough examination by surveying the actual figures and revised estimates of variance sales branches in various areas, to verify the correctness of trend and other ratio figures. Of special importance is the controlling survey of discount, returns and other variations from standard and competitive prices and of the gross profit ratios to standard costs.

which in turn requires in addition to summary figures random access to selected sequences of the details which build up the summary figures of certain of the summary figures require special attention or consideration.

The follow-up of the direction in the sales activity and the support of the individual salesmen may contribute greatly to sales success and to the reliability of sales forecast or planning figures. The access to all pertinent information for sales discussions, which may include in addition to typical sales information, as indicated in Chart VIII*b*, financial and personal information about the customer and its responsible officers, requires random access to sequentially merged up-dated data.

The reliability of the sales planning data influences to a high degree the reliability in the area of sales inventory planning and control. To avoid heavy financial losses on the one hand, but to have on the other hand the proper volume of commodities at the proper place, a continuous survey, as indicated in Chart VIII*c*, with access to individual detail data is required.

CHART IX.—OPERATIVE FILE RECORDS
[For sales planning and control]

CHART IX*a*.—SINGLE ORDER BUSINESS

Survey of Inquiries
Product Area Delivery Time Estimated Probability of Certainty $ .....
(summaries with details for inquiry above specified amounts or for special products or customers)

CHART IX*b*.—SURVEY OF ORDERS

Period, Product, Area	Promised Delivery Time	Change of Promise	Actual Delivery	Budget Sales Amount	Budget Cost	Budget Profit	Actual Sales Amount	Actual Cost	Actual Profit	Variance Sales	Variance Profit

(Summaries with selected details)

In many cases, simple random access may be sufficient for the inventory survey itself, but access to analytical details for selected items, if required, about sales to individual customers and suppliers and their activity pattern with relation to time compared to forecast, etc. may result in many cases as very helpful tools for an economically effective sales inventory planning and control. The analytical data for sales planning and control are supplemented by surveys of inquiries and orders grouped into periods, product groups and products, sales areas and type of customers, as described in greater detail in Charts IX*a* and IX*b* for single order sales activity.

Planning and control of single order business requires constant survey and follow up of the survey of inquiries and orders in close cooperation with production planning and control. The survey of inquiries permits the direction of the sales efforts to special individual interest, which may vary with respect to product, customer, facilities, capacity available and profit margins. The required information usually includes the details indicated in Chart IX*a*. The survey and follow-up requires that any summary data may be separated into details on request, and it is the nature of such business that such requirements for details may be made random-wise at any time. Since only fractions of inquiries result in orders, continuous up-dating is required.

A continued survey and follow-up of the order information with special emphasis on price, cost and scheduling aids considerably to keep the business activity under reliable control. Weaknesses as well as strong points should be known as early as possible in order to react in time because what is missed not only immediately influences the relationship between a customer and suppliers but it influences the total future business activity. Any information of pertinence for the order and the relationship to the customer should be collated together, so that any exception to plans and agreements should be brought immediately to reported attention. Such information may include data illustrated in Chart IX*b*.

D. *Interdepartmental and interorganizational communication*

File economics should determine the preference for centralized or decentralized file systems or combinations of both in dependence on the individual case. Of the general rules which apply, the first is that if files which require a certain degree of up-dating are needed in the same or similar form of data organization by different users, preferably in the same company and in localities geographically near each other, they should be shared, if it is technically possible. Such files may comprise, for example, reference files (file A1 of FIG. 1) such as the address files of customers. If the file locality may be at a central geographical location, a central department or user may have the up-dating responsibility. If the information is preferably used in one department or by one user, this department or user may have the up-dating responsibility and the capability of recording and erasing data within the file, whereas selected other users may have only inquiry access to such file information. If the file volume is large, such responsibilities may be allocated to separate groups of users, each of which is responsible for certain fractions of such file data.

The second general rule is that if in operative file systems (file A1 of FIG. 1) various localities require similar operative influence to file data depending on random access inquiries such as, for example, airline reservation systems, the file systems should be shared under local decentralized intervention or control in the recording and sensing of such data.

The third general rule is that if in operative file systems (file B1 of FIG. 1) of random-sequential type, various departments or local users require individual operative influence on different file data or file data of different structure or grouping, the responsibility for recording, erasing and otherwise processing such data should be restricted to such departments or local users and selected others may have only inquiry access to such data. The decision between the use of a central file or a decentralized file system should then be made only under economic considerations.

It is an objective of the present invention to provide inexpensive processing means for sorting, merging, searching and arithmetic up-dating of file information. This is especially applicable to administrative type of file information. For such applications, the managerial systems advantage of individual responsibility and scheduling of file processing systems appears to be technically and economically attainable, since the main part of processing is not repetitive use of information stored in a random-wise accessible working and program storage, as it preferably is in mathematical routines, but in selective processing of streams of data file information transferred from one file location to another.

The potentials of the inner memory systems of universal type computers are therefore barely used whereas the systems limitations of the access to the input and output file data are obvious in central single file processing compared to parallel independent file processing.

If, on the other hand, scientific processing is the major part of operation, the use of central buffer file and computer systems may be economical. Here again, independent file processing units in the form of the disclosed invention are of great advantage as preparatory input file means and are very suitable as user-oriented means in the output channels of central systems.

Although, as hereinbefore illustrated, especially in the charts, the data required in the operative files of the various departments are very different from each other and require individual handling with respect to the required detail, grouping and timing of processing, it is apparent that the planning and control functions should have for

best results an integrated communication network between such files at various levels of activity.

The great influence of sales figures on sales inventory planning and control and on production planning and control, and consequently on the purchasing, budgeting and financial planning and control, and vice versa, is obvious, and there is a great need that computers assist in solving the complexity of these problems. This requires that the computers improve:

The possibilities for an integrated planning, control and up-dated reporting system.

The potential use of flexible budget, standard and scheduling systems.

The speed for detecting variances and reacting on exceptions on the managerial level.

The potentials of local planning, control and up-dated report systems with speedy and rapid reaction.

The reliability of presenting facts and their mutual dependency, and

The capacity to check various alternatives before major decisions are made and to improve or optimize the efficiency of such decisions.

It is apparent, however, that not every change in an operative sales file, requires a change in financial, budgetary or production planning; just as many changes in production planning and control do not influence the sales or financial planning and, as many financial planning changes do not influence the current sales and production planning and control, although some do. One common file containing all the data and fulfilling all these complex requirements simultaneously appears to be a very difficult solution due to the resulting technical and programming systems complexity, except in a very simple case. However, the application of the recognized basic management principles of multiple management combined with management by exception may result in achieving such an aim and may provide an integrated computer system for planning, control and updated reporting without having to interfere technically with such basic management principles.

A comparison may explain the principle proposed. It is generally known that it is not necessary to transmit all receipt and withdrawal transactions for all the items of inventory from all localities cross-country to one center file in order to insure that in case of a surplus of certain items at one place and a demand at another place an exchange may occur. It is only necessary that such exception information for surplus or demand be transmitted to a communicating center or at first to the nearest geographical localities for a possible interchange, and therefore for such purpose such exception information has to be locally, for example, automatically, produced.

Similarly, the departments or other organizational users may retain their authority over operative file systems if provision is made for the detection and reporting of exceptions, and if such exceptions exceed certain limits of interference with other areas of activities within an organization a decision has to be made to select this or another solution of the problem. The principal requirement is the common network and the accessibility to each information sequence, if needed.

Common and integrated budgetary and standard principles are fully applicable. This permits every possible freedom in deciding upon mutual interaction by setting rules, when variances have to be brought to the attention of, for example, the central controller, and he may in turn set up his own managerial rules for interdepartmental communication levels.

Auditor trails and generally applied systems methods may be set for the proper use of the individual freedom of action, but they are set by coordination of efforts by a communicating computer file system to permit operation according to the principles of multiple management and management by exception.

E. *Objects*

The principal object of the present invention is to provide a new and improved data handling system.

An object of the present invention is to provide a completely dynamic data handling system.

Another object of the present invention is to provide a new and improved data handling system which provides results similar to a punch card system.

Another object of the present invention is to provide a new and improved data handling system which sorts, collates, tabulates and calculates similarly to a punch card system.

Another object of the present invention is to provide a new and improved data handling system which functions substantially as a complete dynamic computer as opposed to a static memory computer.

Another object of the present invention is to provide a dynamic data handling system which is inexpensive and rapid in operation relative to a static memory system.

Another object of the present invention is to provide a dynamic data handling system which is highly accurate, efficient and reliable in operation.

Another object of the present invention is to provide a dynamic data handling system which performs operations in a number of selected information tracks simultaneously.

Another object of the present invention is to provide a dynamic data handling system which performs a number of functions simultaneously.

Another object of the present invention is to provide a dynamic data handling system which selects information from a number of different tracks simultaneously, merges the information and transfers the merged information to another track.

Another object of the present invention is to provide a dynamic data handling system which utilizes switchable gates for a number of information tracks to permit the selection of information under selective control.

Another object of the present invention is to provide a dynamic data handling system which utilizes the switching of sensing heads in a number of information tracks for the selection of information under selective control.

Another object of the present invention is to provide a dynamic data handling system which utilizes a number of presensing stations for presensing information in a number of information tracks.

Another object of the present invention is to provide a dynamic data handling system which utilizes the presensing of information in a number of information tracks for selecting information for comparison.

Another object of the present invention is to provide a dynamic data handling system which utilizes the switching of sensing heads in a number of information tracks to move a head forward in effect when information is selected and to maintain the head stationary in effect when information is not selected.

Another object of the present invention is to provide a dynamic data handling system which utilizes the presensing and switching of sensing heads in a number of information tracks under joint control.

Another object of the present invention is to provide a dynamic data handling system which requires a minimum amount of programming.

Another object of the present invention is to provide a dynamic data handling system which reduces the number of intermediate storages.

Another object of the present invention is to provide a data handling system which provides new and improved random and sequential file access.

Another object of the present invention is to provide a data handling system which provides random and sequential file access of great efficiency, speed and accuracy.

Another object of the present invention is to provide a data handling system which provides rapid access to updated or up-to-date files.

Another object of the present invention is to provide a dynamic data handling system in which groups of informations are controlled as groups.

Another object of the present invention is to provide a dynamic data handling system which eliminates the need for cores.

Another object of the present invention is to provide a dynamic data handling system which arranges informations fed in sequential order and processes informations in sequential order so that the input and output informations may be prepared for arithmetic operations.

Another object of the present invention is to provide a data handling system which eliminates idle runs.

Another object of the present invention is to provide a data handling system which utilizes the sequential order sorting of informations and permits direct access to selected information.

Another object of the present invention is to provide a data handling system which utilizes arithmetic operations which are executed at great speeds in short time periods and therefore entail little expense.

Another object of the present invention is to provide a dynamic data handling system in which informations are interlaced with each other.

Another object of the present invention is to provide a dynamic data handling system in which informations are dynamically shifted back and forth to obtain fixed fields from variable fields.

Another object of the present invention is to provide a dynamic data handling system in which fixed fields are compressed to position them closer together.

Another object of the present invention is to provide a dynamic data handling system in which delay lines are synchronized with rotating memories.

Another object of the present invention is to provide a dynamic data handling system in which informations and program are presensed.

Another object of the present invention is to provide a dynamic data handling system which utilizes a revolver in combination with controlled delay time and interlaced channels.

Another object of the present invention is to provide a dynamic data handling system in which selected fields make program decisions.

Another object of the present invention is to provide a dynamic data handling system which utilizes delay lines to sort selected fields and to shift fields to fixed field conditions.

Another object of the present invention is to provide a dynamic data handling system utilizing a new and improved fixed delay line.

Another object of the present invention is to provide a dynamic data handling system utilizing a new and improved stepwise controllable delay line.

Another object of the present invention is to provide a dynamic data handling system utilizing a new and improved parallel revolver arrangement.

Another object of the present invention is to provide a dynamic data handling system in which the sequence of fields in a track is changed in a sorting operation.

Another object of the present invention is to provide a dynamic data handling system having a great input capacity.

Another object of the present invention is to provide a dynamic data handling system having an asynchronous input.

Another object of the present invention is to provide a dynamic data handling system utilizing a new and improved unlatched keyboard arrangement.

Another object of the present invention is to provide a dynamic data handling system utilizing a new and improved printer arrangement.

Another object of the present invention is to provide a dynamic data handling system utilizing a new and improved disc and disc mounting arrangement.

Another object of the present invention is to provide a new and improved two way comparator circuit arrangement.

Another object of the present invention is to provide a new and improved three way comparator circuit arrangement.

Still another object of the present invention is to provide a dynamic data handling system having new and improved circuit arrangements which may be utilized as components thereof.

The dynamic data handling system of the present invention provides considerable advantages over static memory computers and especially core memory computers. It is considerably less expensive to record in a track of the data handling system of the present invention as opposed to a core. The data handling system of the present invention may perform a number of functions simultaneously whereas a core memory can only perform a single function at a single time. The instructions for the core must first be prepared and put in the program. A part of the core memory must then be addressed. Then the instructions must be read out and fed to a register and the register must be instructed. The core operation is thus a slow one.

The core driver system is very expensive and can do only one thing at a time with the core. The entire memory performs only one function at a time and its speed is in the range of 500 kilocycles to one megacycle. The data handling system of the present invention has a greater speed than the core memory relative to its size and does not utilize driving since it has no need for driving; the information being arranged in said data handling system in sequential order. The need for cores is eliminated by direct synchronization of storages.

In presently known computers, the information is stored in different registers and the program has to direct all the operations. Due to the storing of information and result in separate registers, elaborate programming is necessary to obtain results. In the data handling system of the present invention, the data is recorded in sequence in a track and is therefore readily accessible, thereby reducing necessary programming. The program has merely to direct addition or subtraction and to select an output position.

In the data handling system of the present invention, each field is recorded in a specific position. The program is recorded one field ahead, so that selected data is directly handled and data handling is achieved with facility. Programming is very easy and different programs are very easily coordinated.

The arithmetic operations of the data handling system of the present invention are achieved in less time and at greater speeds than presently known arithmetic operations and therefore entail considerably less expense than known arithmetic operations.

In tape systems, wherein information is stored in tracks, there are necessarily idle runs. The data handling system of the present invention permits the bypassing or jumping of undesired or unnecessary areas of information. The data handling system of the present invention thus retains the advantages of tapes, such as, for example, sequential order sorting, and combines these advantages with the advantages of a file, such as, for example, direct access to a selected information.

The files utilized in the data handling system of the present invention may be changed like tape reels because there is no need for access to all the parts of the memory simultaneously. This is due to the fact that the parts of the memory are in sequential order and the operation is only in a fraction of the memory. The cost of the files is thus reduced, since otherwise, all the informations would have to be directly accessible.

A tape has a surface space of only about an eighth of a file surface space at full speed rotation. The files of the data handling system of the present invention have the

X X X

CLAIMS

* * * *

20. A record-keeping machine system for financial accounts, said system comprising a data processor including a memory for storing combinatorially coded signal records: a processor for combining and comparing the coded signals of said records; input and output devices; and a control system for supervising and directing said other parts of said data processor to perform a certain sequence of operations; said memory including a storage file of a plurality of machine-readable records formed of coded combinatorial signals, a master section of said file including a plurality of predeterminedly sequenced sub-files of said records, each said sub-file including a different signal group record for a certain one of a plurality of account identifications, a plurality of predeterminedly sequenced different signal group records for different record-keeping category codes individually associated with each of said account identification records, a plurality of different group records each for an amount total associated with a different one of said category records, and a plurality of totalizing operation records individually associated with certain pluralities of said category records and sequenced with the associated category records, a transaction section of said file including different pluralities of sub-files of said records, each of said transaction sub-files including one of said account identification signal group records, one of said associated category signal group records, and a separate transaction amount signal group record associated with each of said category records; said control system including means for directing the processing of said files in accordance with the predetermined sequences of said master sub-files and of said category records of each sub-file, and processing directing means including means for locating in said master file section, for each of said transaction sub-files, that one of said category records corresponding to the transaction account identification record and the transaction category record and for augmenting the associated master amount total record by the amount records of the

corresponding transaction sub-file; and means for producing an output record for each of said master sub-files, said output record producing means including means for identifying each of said master sub-file category records and for producing an output listing of the sub-file category codes and of the associated category amount total from said records, means for directing the accumulation of the amount totals of successive ones of said category records, and means for identifying each of said totalizing records and for producing an output record of said accumulation of totals of the preceding category records.

21. A record-keeping machine system as recited in claim 20, wherein certain of said master sub-files include totalizing records of a plurality of different types, and wherein said accumulation directing means includes means for directing a plurality of different accumulations of said category amount totals respectively associated with said totalizing record types, and said totalizing identifying and output means includes means for producing output records of respective ones of said accumulations in accordance with the different types of totalizing records, and means for directing the resetting of the associated accumulation for certain ones of said types.

22. A record-keeping machine system as recited in claim 20, wherein a plurality of said master sub-files further includes a plurality of different signal group records each providing a coded individual description of a different one of said category and totalizing records; said output record producing means including means for producing an output record of each of said individual descriptions with the output of the associated category code and total.

23. A record-keeping machine system as recited in claim 20, wherein said control system includes means for directing the addition to a specified one of said master sub-files of a signal group record for a record-keeping category code and for controlling its insertion in proper sequence with the other category records of the specified sub-file, and for directing the deletion of a specified record therefrom, whereby the record-keeping system of each account may be individually modified.

24. A record-keeping machine system as recited in claim 23, wherein said addition and deletion directing means includes means for modifying said amount total record of a specified one of the category records, whereby errors in the records of each account may be individually corrected.

* * * *

Patent Appeal No. 9088

NOTICE OF APPEAL TO THE UNITED STATES COURT OF CUSTOMS AND PATENT APPEALS, DECEMBER 28, 1971.

Hon. Commissioner of Patents
Washington, D.C. 20231

Sir:

Appellant hereby gives notice of his appeal to the United States Court of Customs and Patent Appeals from the decision of the Board of Appeals rendered on or about October 27, 1971, which decision reversed each of the rejections (which were based on 35 U.S.C. 101, 102 and 112) advanced by the Patent Examiner below and entered new rejections of claims 1 through 11 and 16 through 27, inclusive.

The following are assigned as reasons of appeal:

1. The Board of Appeals erred in failing to allow claims 1 through 11 and 16 through 27 and in entering new rejections of those claims.

2. The Board erred in its summary statement of appellant's invention by omitting important features thereof.

3. The Board erred in holding that the details of the disclosed machine-readable program for a computer "are not brought into issue in this appeal by reason of the character of the claims presented."

4. The Board erred in holding that the claims are "either to a method of bookkeeping . . . or to apparatus that automatically carries out . . . the steps of the bookkeeping method."

5. The Board erred in holding that all of the aforementioned claims fail "to point out and distinctly claim that which appellant considers to be his invention" and therefore that the claims fail to meet the requirements of 35 U.S.C. 112, second paragraph.

6. The Board erred in holding that appellant did not consider his invention to be the use of a form of automatic data processing "for the financial record-keeping and statement-furnishing operations of a bank."

7. The Board erred in holding that "the appealed claims, both apparatus and method [are] not directed to improved record keeping machinery, but rather to a broad system of keeping financial records."

8. The Board erred in holding "the distinction over acknowledged prior record-keeping is either in the identity of the person or institution which has custody of certain phases of the bookkeeping operation or in the financial meaning of or the relationship existing between, the various records."

9. The Board erred in holding that there is "broad sweeping reference in the claims to the automation of the banking industry," and that such reference "serves only as a dress for claims that spell out, in effect, the relationship of a bank and its customers, not any particular configuration of business machinery."

10. The Board erred in holding that the claims are indefinite under 35 U.S.C. 112, second paragraph, for "failing to distinctly point out the invention."

11. The Board erred in holding that the claims on appeal, "both method and apparatus, purport to identify record storing portions of the apparatus or method steps, only by the particular financial meaning to be accorded this data."

12. The Board erred in holding that the meaning to be accorded data "in no way can define either the construction of the data storing apparatus or the machine processing steps thereof."

13. The Board erred in holding that "there can be no structural or operational relationship of a computed memory with the meaning one chooses to assign outside the computer to a particular configuration of binary digits or 'bits' in its memory."

14. The Board erred in holding that "although a group of such bits is processed as an alphanumeric character within the computer this results from the physical states of the memory cells and manifestly this is unrelated to whether a series of such characters represents a stock number of a part or a sum of money, outside the computer."

15. The Board erred in holding that "the only identification of the meaning represented by a section of the computer memory is in the mind of the user and cannot define any characteristic of the apparatus."

16. The Board erred in suggesting that appellant "chooses to denominate a section of its memory by a term descriptive of one meaning, such as a file of stock numbers rather than a file of sums of money."

17. The Board erred in holding that all the claims are indefinite under 35 U.S.C. 112.

18. The Board erred in holding that the claims on appeal embrace, in apparatus claims or as a part of the apparatus steps of method claims, that which has been "held to be outside the scope of apparatus."

19. The Board erred in holding that the claims are "for subject matter outside the patent statutes" and therefore unpatentable under 35 U.S.C. 101.

20. The Board erred in holding that "those systems which do extend beyond the field of technology are not within the 'technological arts' and are non-statutory" and in failing to recognize that any constitutional limitation under 35 U.S.C. 101 is to the "useful arts."

21. The Board erred in holding that the *Benson et al.* decision (169 U.S.P.Q. 548) was a ruling by the C.C.P.A. "that 'liberal arts' are to be excluded from the 'useful arts' and, hence, innovations directed thereto are non-statutory."

22. The Board erred in failing to follow the ruling in *Benson et al.* that "all other types of business machines" are in the "technological arts."

23. The Board erred in holding that appellant's invention reflects "no concern for the enhancement of the internal functional of the machine."

24. The Board erred in failing to recognize that the invention of this application falls within the Board's definition of improvements in machines "that replace manual effort" and is therefore within the "technological arts."

25. The Board erred in holding that appellant's invention is outside of the "technological arts."

26. The Board erred in holding that "the claims on appeal simply specify that the bank will perform the book-

keeping and accounting services for its customers, rather than each customer performing his own."

27. The Board erred in holding that each data file in the appealed claims "is identified only as to its role in the bookkeeping and accounting system, in association with 'means' for performing conventional bookkeeping and accounting operations on the data files."

28. The Board erred in holding that the recitation of the claims "is without regard to the particular apparatus used to perform these operations and certainly with no 'enhancement' of the machine operation spelled out."

29. The Board erred in holding that there is "no essential difference in substance between the apparatus and process claims" and that they "must stand or fall together."

30. The Board erred in holding that the claims on appeal "would, in effect, grant a monopoly to appellant on a method of conducting the banking business."

31. The Board erred in holding that "banks would [by these claims] be restricted to the use of their data processing equipment only for their own bookkeeping and not being allowed to freely expand into the business of keeping books for their customers."

32. The Board erred in holding that the grant of these claims "would allow the intrusion of the patent system into the social sciences already under regulation by governmental agencies" and it "would exceed the constitutional grant of authority to issue patents in the 'technological arts'."

33. The Board erred in holding that the claims are unpatentable under 35 U.S.C. 103.

34. The Board erred in holding that the claims are "for obvious variations of . . . the system of bookkeeping by banks that was acknowledged to be old by appellant on page 2 of the specification."

35. The Board erred in holding that the claims are "for obvious variations of . . . the system of bookkeeping of the Dirks patent [U.S. 3,343,133] when applied to banking rather than industrial business."

36. The Board erred in holding that terms such as "special," "trust," "escrow," "personal" and the like are

each "a category code as called for by the appealed claims" and that the bank's treatment of such accounts "is no different than appellant accords the different category codes."

37. The Board erred in holding that appellant "merely adds the category number to the end of the account number to create, in effect, a series of different and distinct account numbers to be used during most of the data processing."

38. The Board erred in suggesting that appellant's invention is concerned with enabling banks to provide their customers "with a form of cost accounting facilities."

39. The Board erred in suggesting that appellant's invention is "merely printing the summary sheets for all the special accounts of an individual on a single document with totals for all accounts" and in holding that it "would be an obvious convenience to both the bank and the customer."

40. The Board erred in holding that the Dirks patent discloses a system in which "each area is assigned an account number in which transaction and balance files are kept and updated (column 9, lines 21-26)."

41. The Board erred in viewing the apparatus and method covered by the claims as a "bookkeeping apparatus and method" and in holding that it would be "obvious to a person of ordinary skill to use the cost accounting portion of the Dirks system of bookkeeping in the banking . . . business," and in suggesting that use would anticipate the claimed invention.

42. The Board erred in failing to construe appellant's claims in the light of appellant's disclosure, as required by 35 U.S.C. 112, last paragraph.

43. The Board erred in failing to interpret the claims "to cover the corresponding structure, material or acts described in the specification or equivalents thereof" as specified by 35 U.S.C. 112, last paragraph.

44. The Board erred in disregarding the contribution to the art provided by appellant's invention and in holding it would be outside the patent laws as unpatentable subject matter.

45. The Board erred in not distinguishing between the claims of different scope and different subject matter and in holding all of them unpatentable for the same reasons as applied to the broadest claims.

Respectfully submitted,

/s/ Morton C. Jacobs
MORTON C. JACOBS

December 23, 1971

SUPREME COURT OF THE UNITED STATES

No. 74-1033

C. MARSHALL DANN, Commissioner of Patents and Trademarks, PETITIONER

v.

THOMAS R. JOHNSON

Order Allowing Certiorari. Filed May 12, 1975

The petition herein for a writ of certiorari to the United States Court of Customs and Patent Appeals is granted.

Mr. Justice Powell took no part in the consideration or decision of this petition.

☆ U. S. GOVERNMENT PRINTING OFFICE: 1975 587289 185

DANN v. JOHNSTON
No. 74-1033
Oct. Term 1975

Sept. 19, 1967 G. DIRKS 3,343,133

DATA HANDLING SYSTEM

Filed Aug. 9, 1963 183 Sheets-Sheet 1

FIG. 1

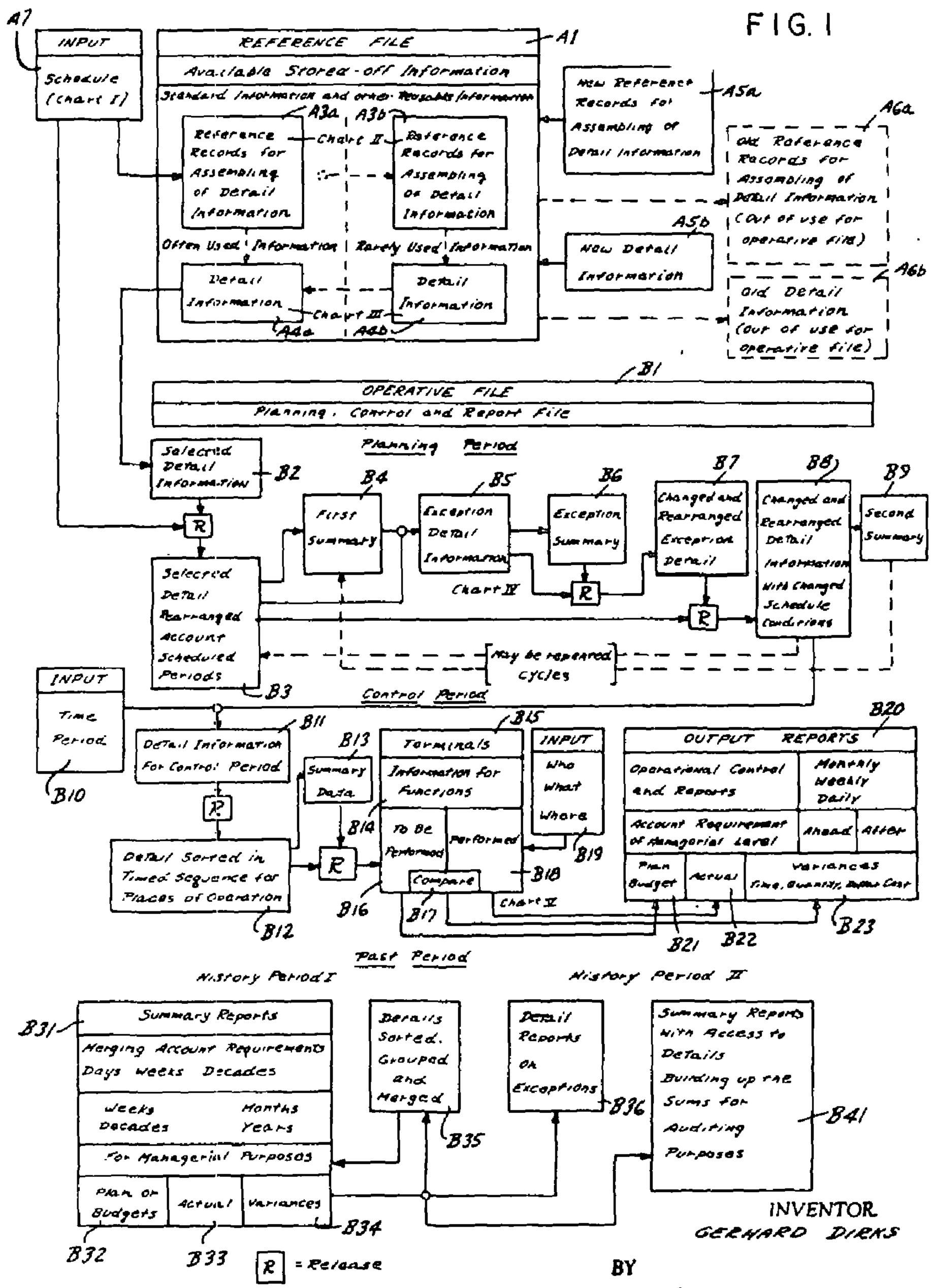

INVENTOR
GERHARD DIRKS

BY

Michael S. Striker

ATTORNEY

FIG. 2a

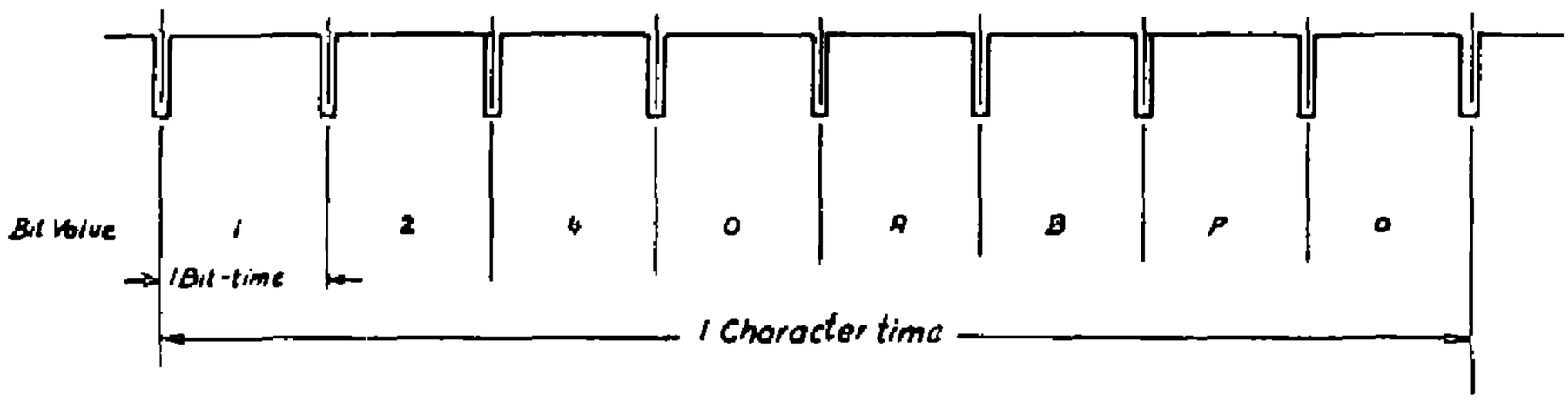

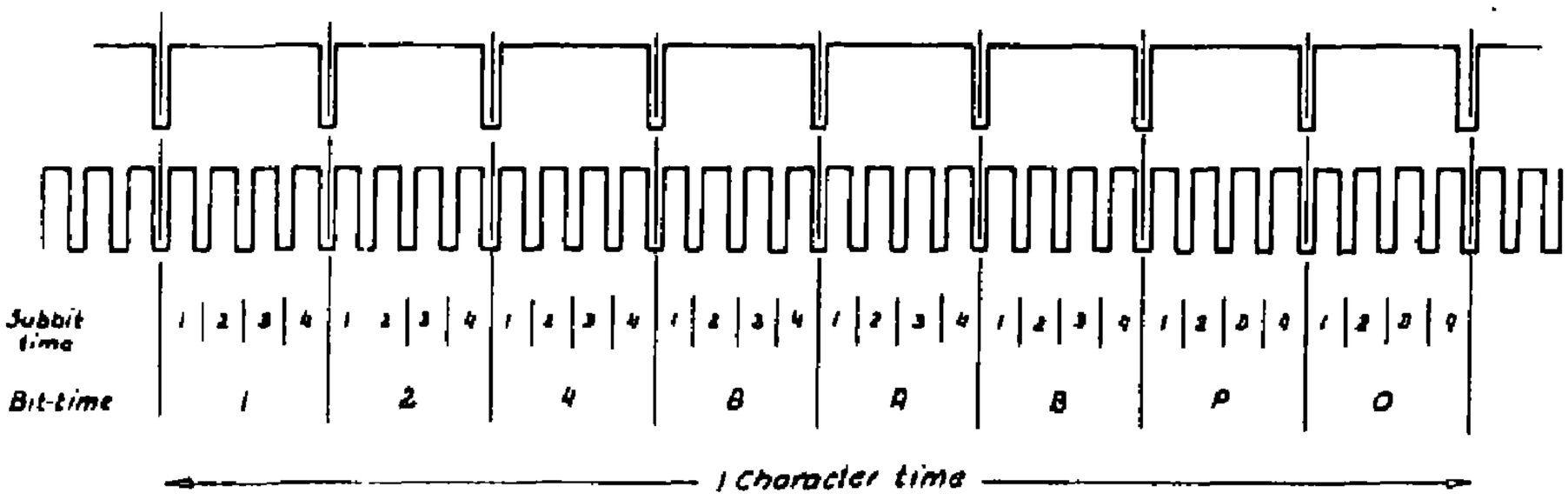

FIG. 2b

INVENTOR
GERHARD DIRKS

BY Michael S. Striker

ATTORNEY

DATA HANDLING SYSTEM

Filed Aug. 9, 1963 183 Sheets-Sheet 3

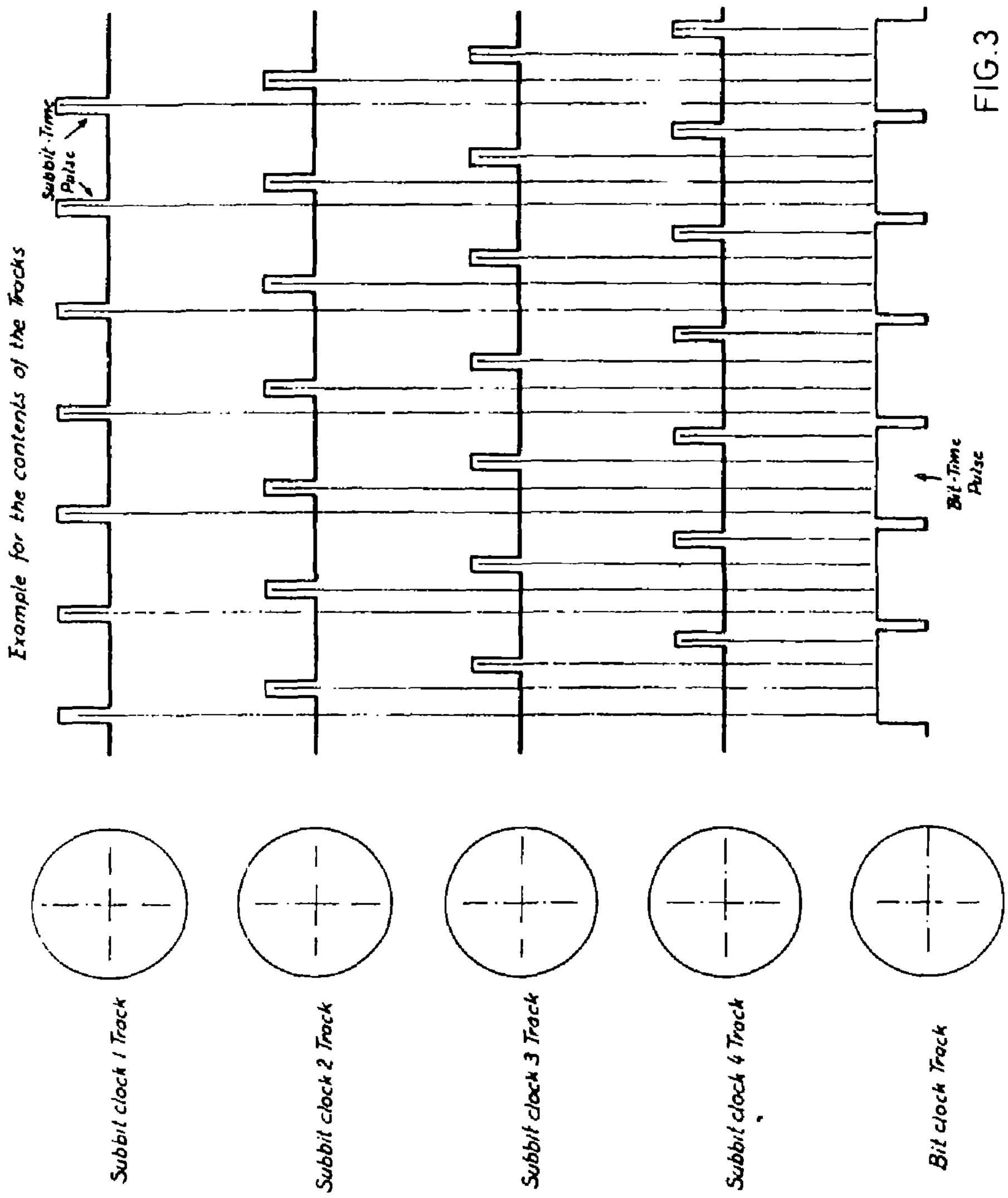

FIG. 3

INVENTOR
GERHARD DIRKS
BY Michael S. Striker
ATTORNEY

DATA HANDLING SYSTEM

Filed Aug. 9, 1963 183 Sheets-Sheet 4

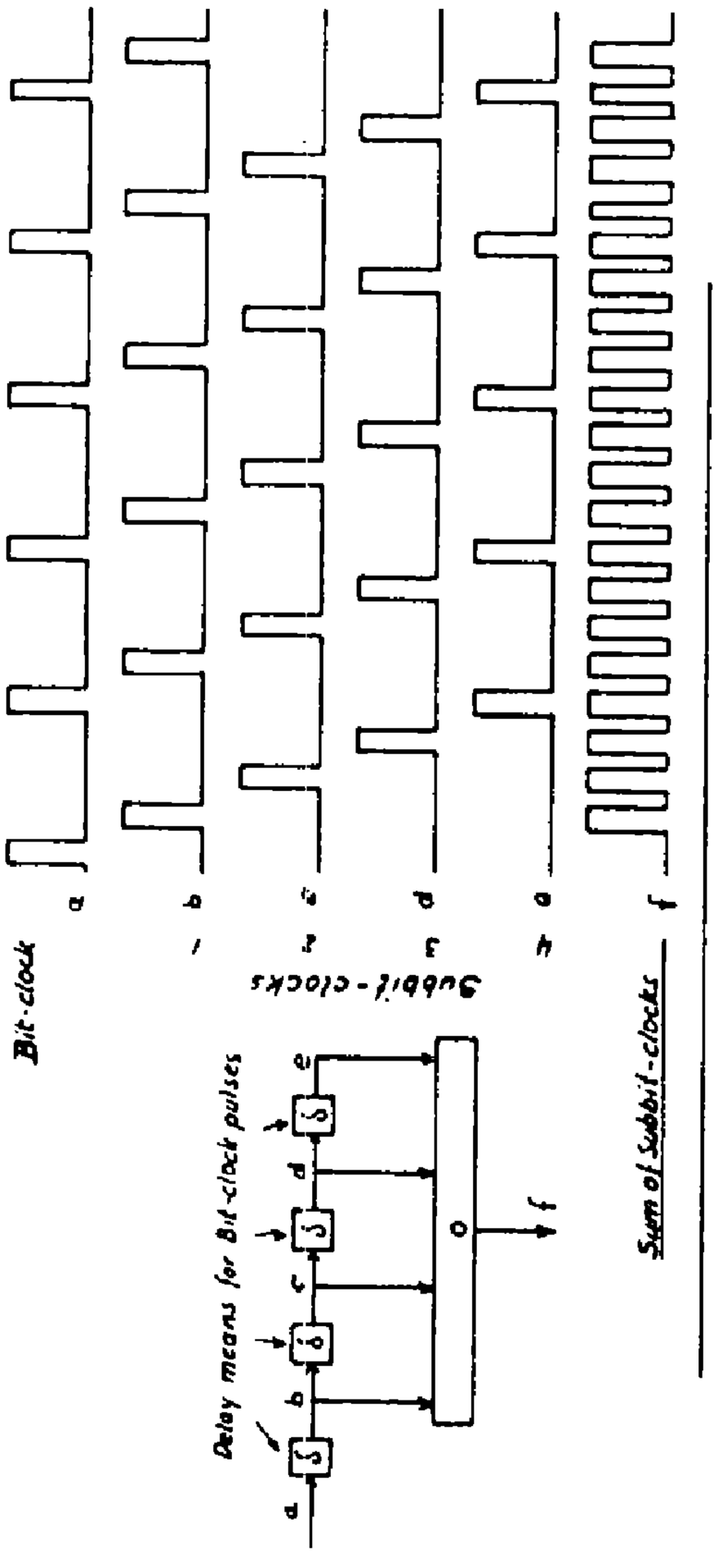

FIG.4

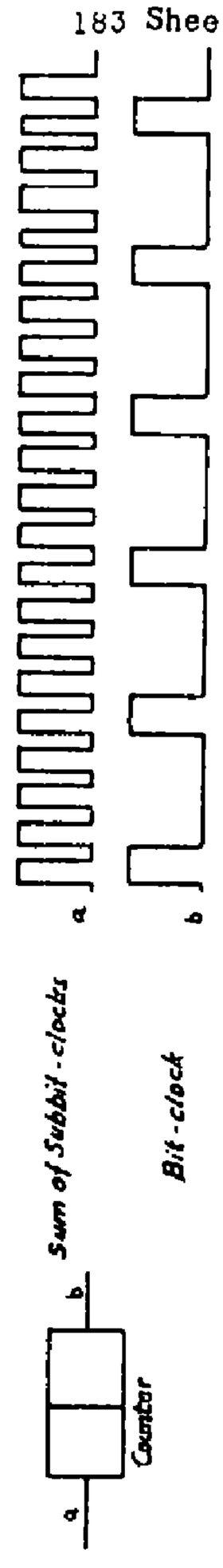

FIG.5

INVENTOR
GERHARD DIRKS
BY Michael S. Striker
ATTORNEY

DATA HANDLING SYSTEM

Filed Aug. 9, 1963 183 Sheets-Sheet 5

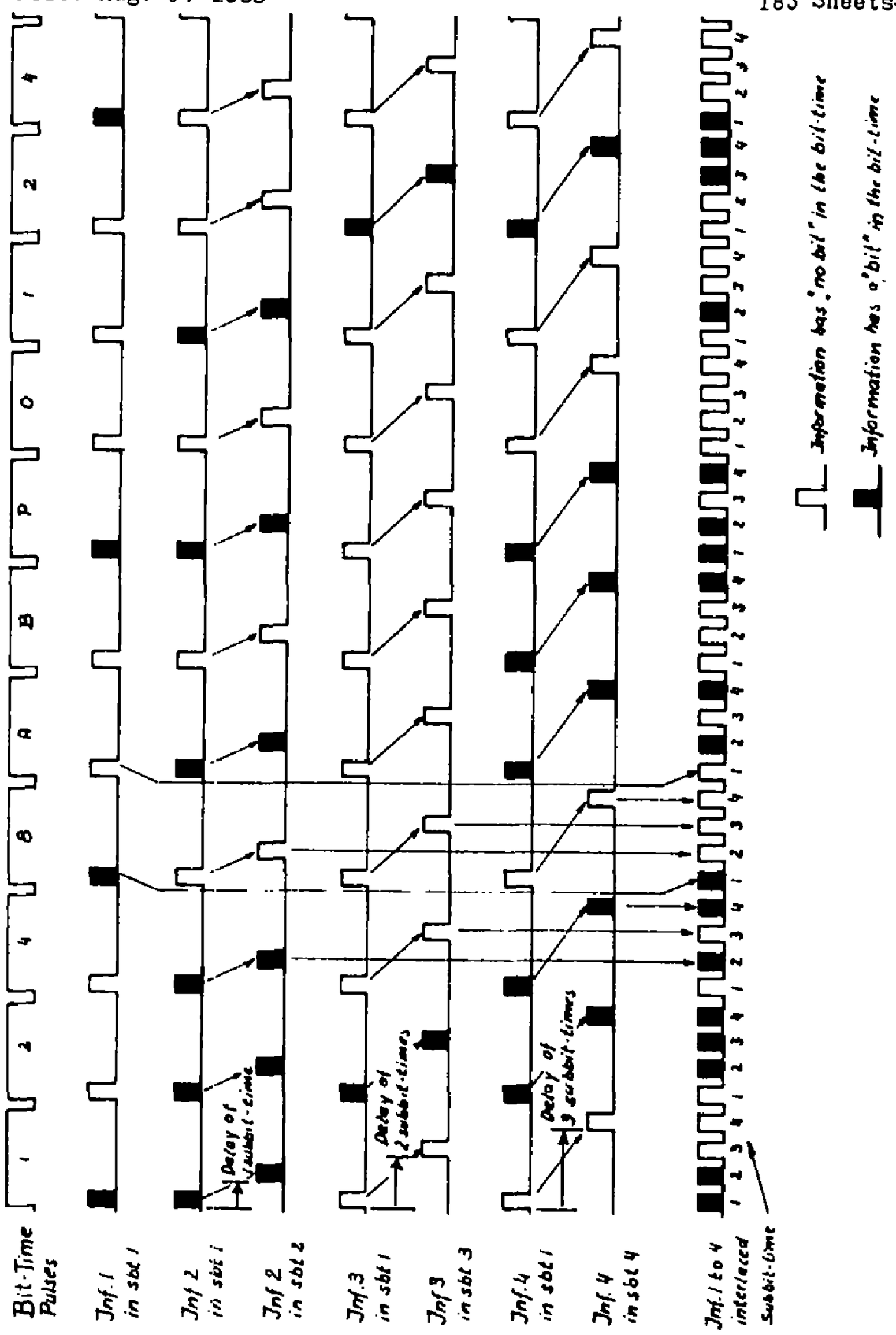

FIG. 6

INVENTOR
GERHARD DIRKS

BY Michael S. Striker

ATTORNEY

DATA HANDLING SYSTEM

Filed Aug. 9, 1963 183 Sheets-Sheet 6

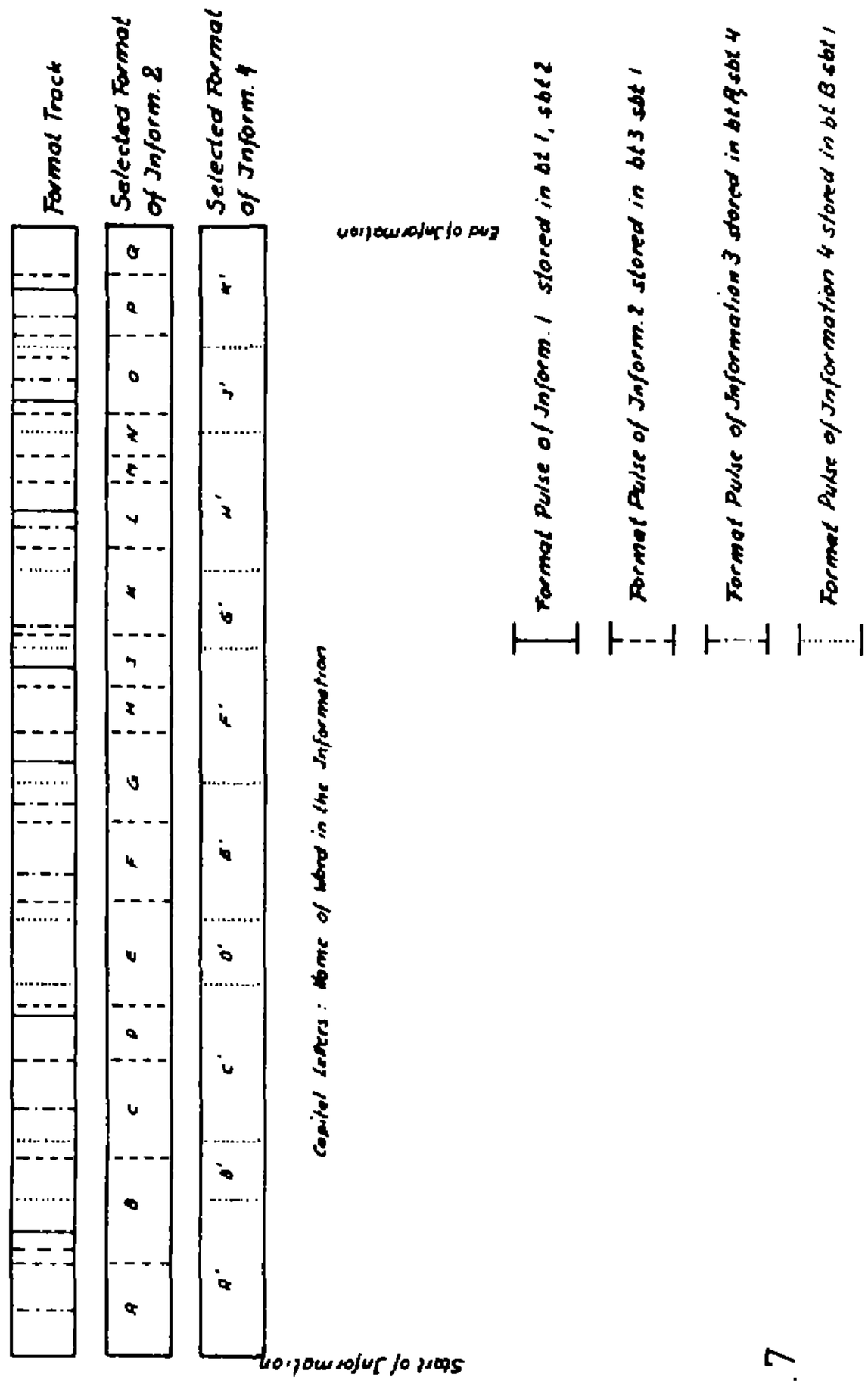

FIG. 7

INVENTOR
GERHARD DIRKS
BY Michael S. Striker
ATTORNEY

DATA HANDLING SYSTEM

Filed Aug. 9, 1963 183 Sheets-Sheet 7

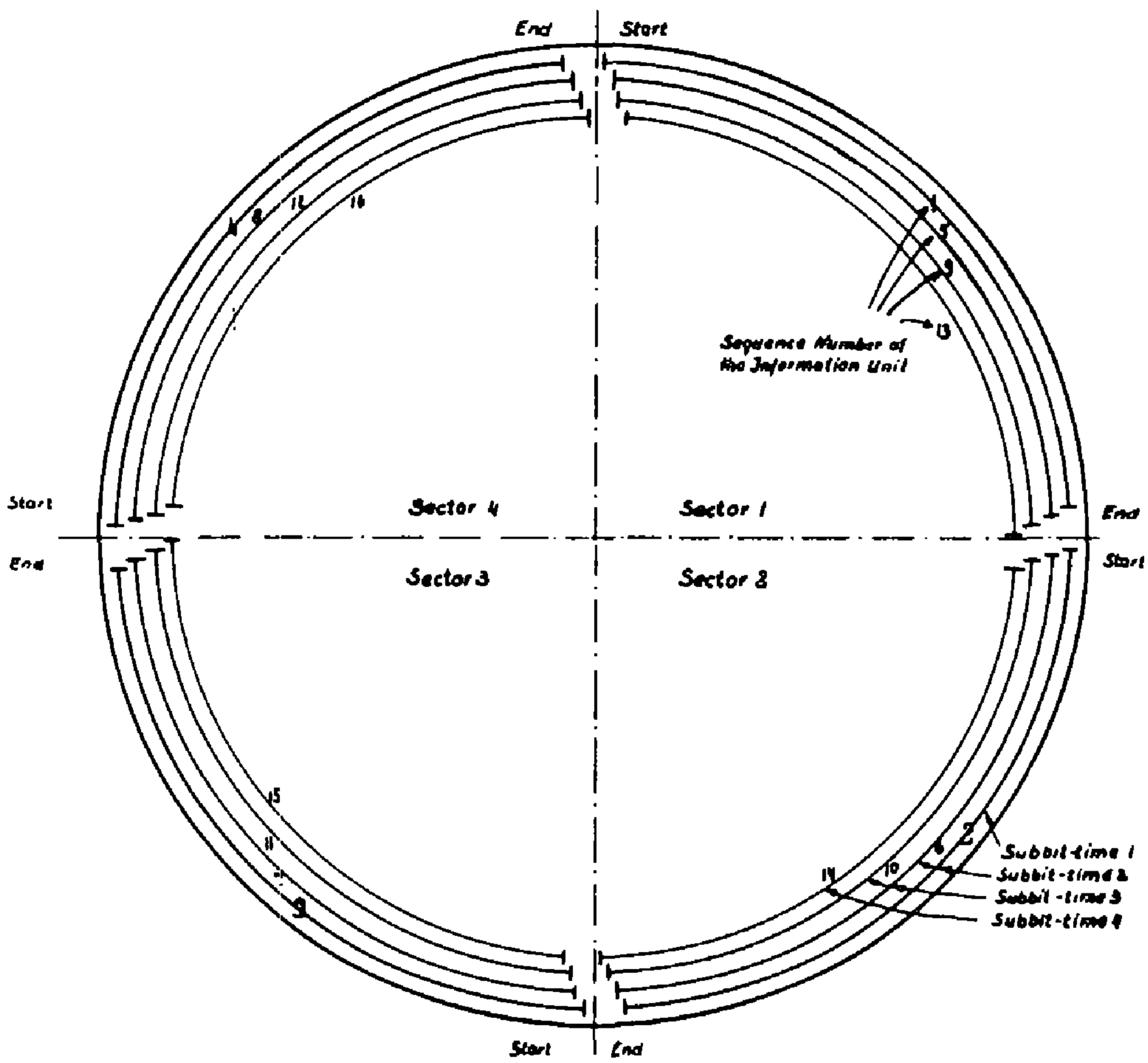

FIG. 8

INVENTOR
GERHARD DIRKS
BY
Michael S. Striker
ATTORNEY

FIG. 9

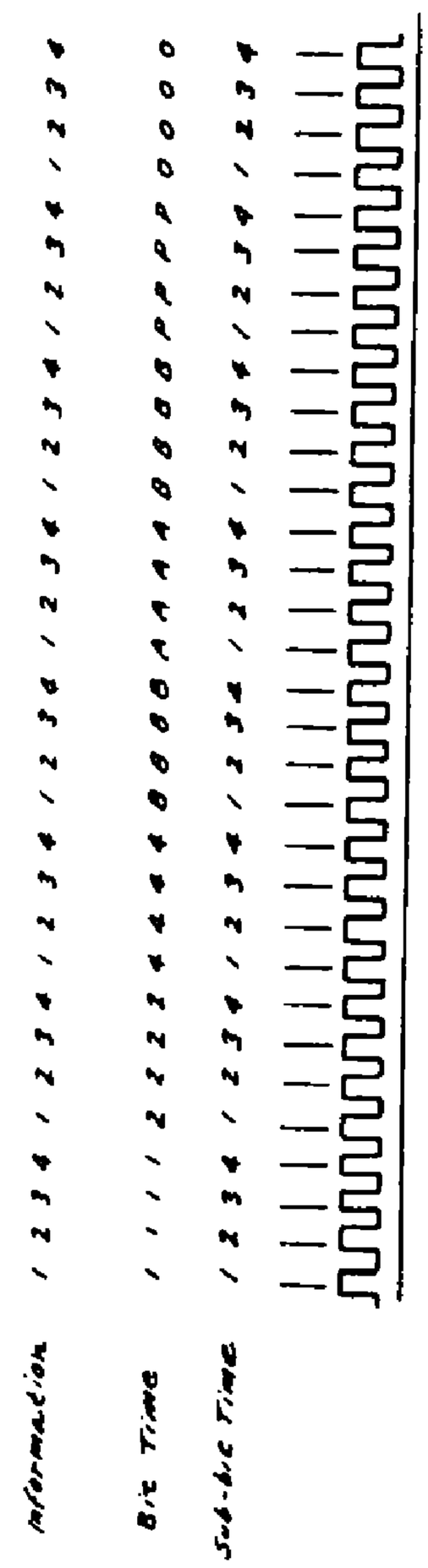

INVENTOR.
GERHARD DIRKS
BY
Michael S. Striker
ATTORNEY

FIG. 10

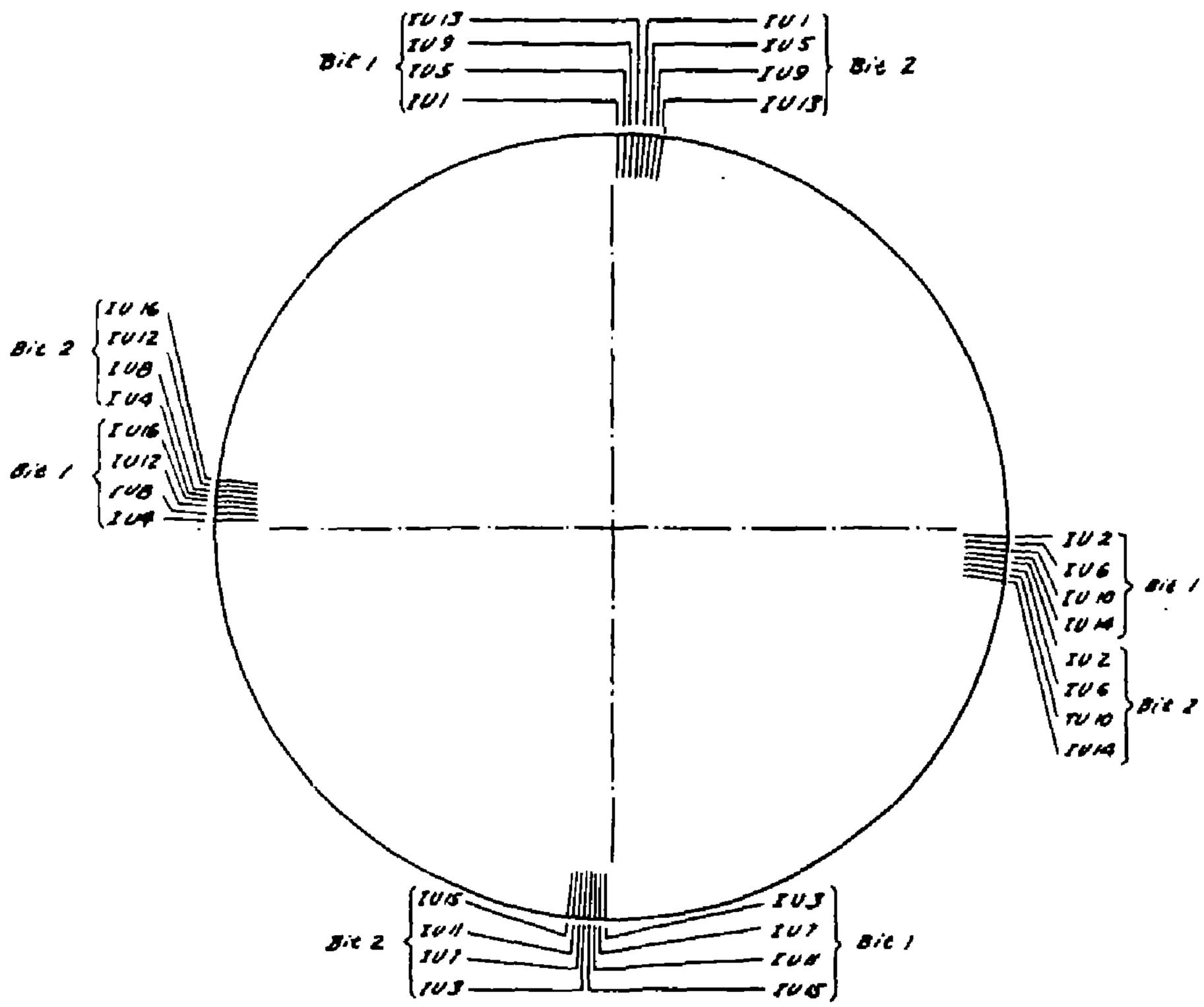

INVENTOR.
GERHARD DIRKS

BY Michael S. Striker

ATTORNEY

DATA HANDLING SYSTEM

Filed Aug. 9, 1963 183 Sheets-Sheet 10

	Person	Group	Department	Factory	Gross Income	Tax	Insurance Deduct	Code	Tax Group: Job Register 1	Tax Group: Job Register 2	Tax Group: Job Register 3	Tax Group: Job Register 4	Insurance Group: Job Register 1	Insurance Group: Job Register 2	Insurance Group: Job Register 3	Insurance Group: Job Register 4	Insurance: Distribution Register A	Insurance: Distribution Register B	Insurance: Distribution Register C
1st Information Unit	1	1	1	1	100	20	10	A	0	0	0	0	0	0	0	0	0	0	0
2nd Information Unit	1	1	1	1	80	16	8	A	20				10				10		
									+16				+8				+8		
3rd Information Unit	1	1	1	1	120	24	12	A	36				18				18		
									+24				+12				+12		
4th Information Unit	2	1	1	1	50	10	5	B	60	60			30				30		
									0	0			0				0		
									+10				+5				+5		
5th Information Unit	2	1	1	1	90	18	9	B	10				5				5		
									+18				+9				+9		
6th Information Unit	3	1	1	1	110	22	11	C	28	28			18				18		
									0	0			0				0		
									+22				+11				+11		
7th Information Unit	1	2	1	1	130	26	13	B	22	88			44				44		
									0	0			0				0		
									+26	+22			+11				+11		
8th Information Unit	2	2	1	1	70	14	7	C	26	110			55				55		
									0	0			0				0		
									+26	+26			+13				+13		
9th Information Unit	2	2	1	1	50	10	5	C	14	26			13				13		
									+14				+7				+7		
10th Information Unit	4	2	2	1	90	18	9	A	18	50			25				25		
									0	0			0				0		
									+10	+24			+12				+12		
													9				9		
											160	160		80	80	80		23	23
											0	0		0	0	0		0	0
											+50			+25				+5	
										+110				+55				+11	

FIG. 11

INVENTOR.
GERHARD DIRKS

BY

Michael S. Striker
ATTORNEY

DATA HANDLING SYSTEM

Filed Aug. 9, 1963 183 Sheets-Sheet 11

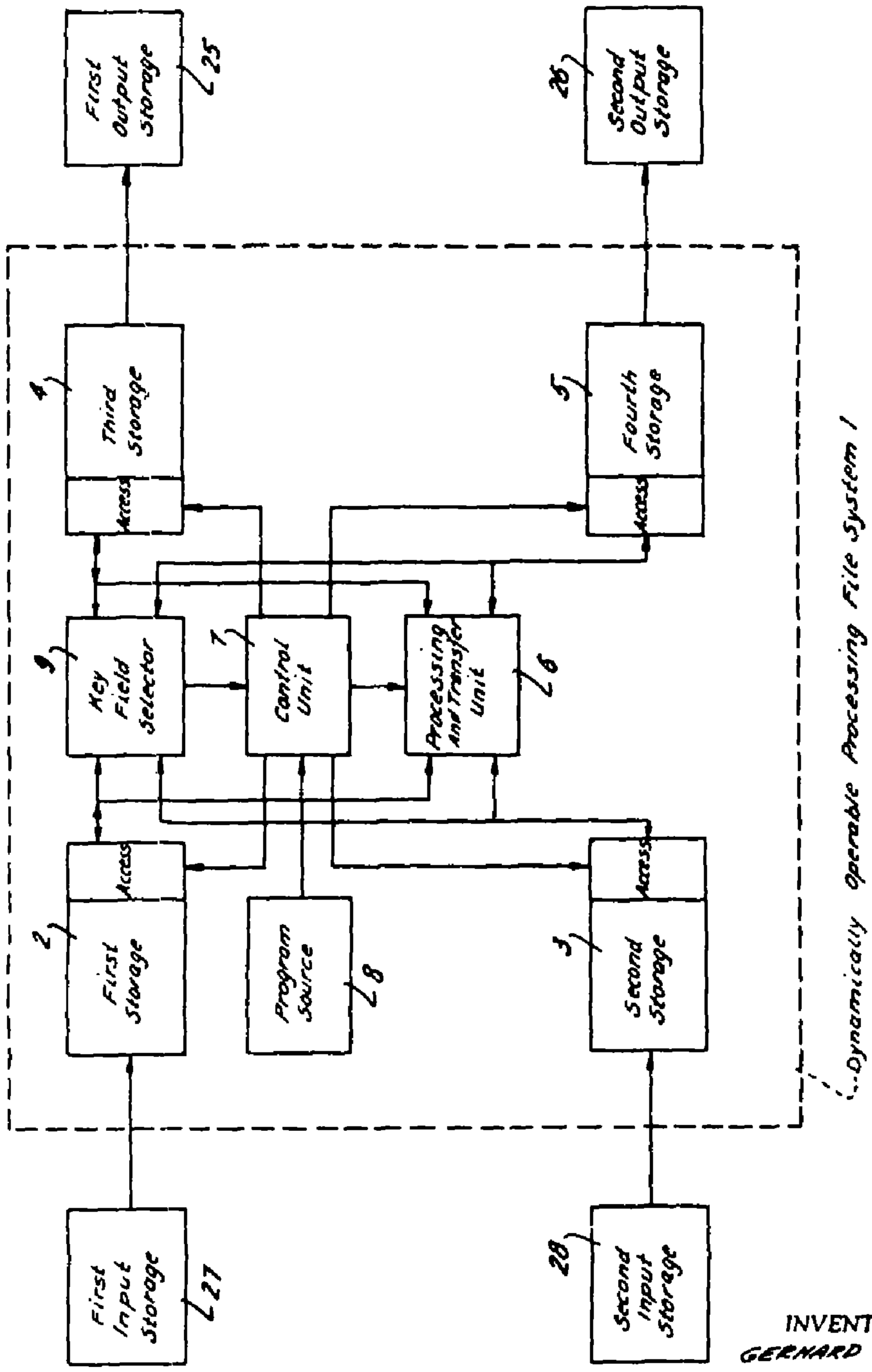

FIG. 12

INVENTOR
GERHARD DIRKS

BY

Michael S. Striker
ATTORNEY

FIG. 13a

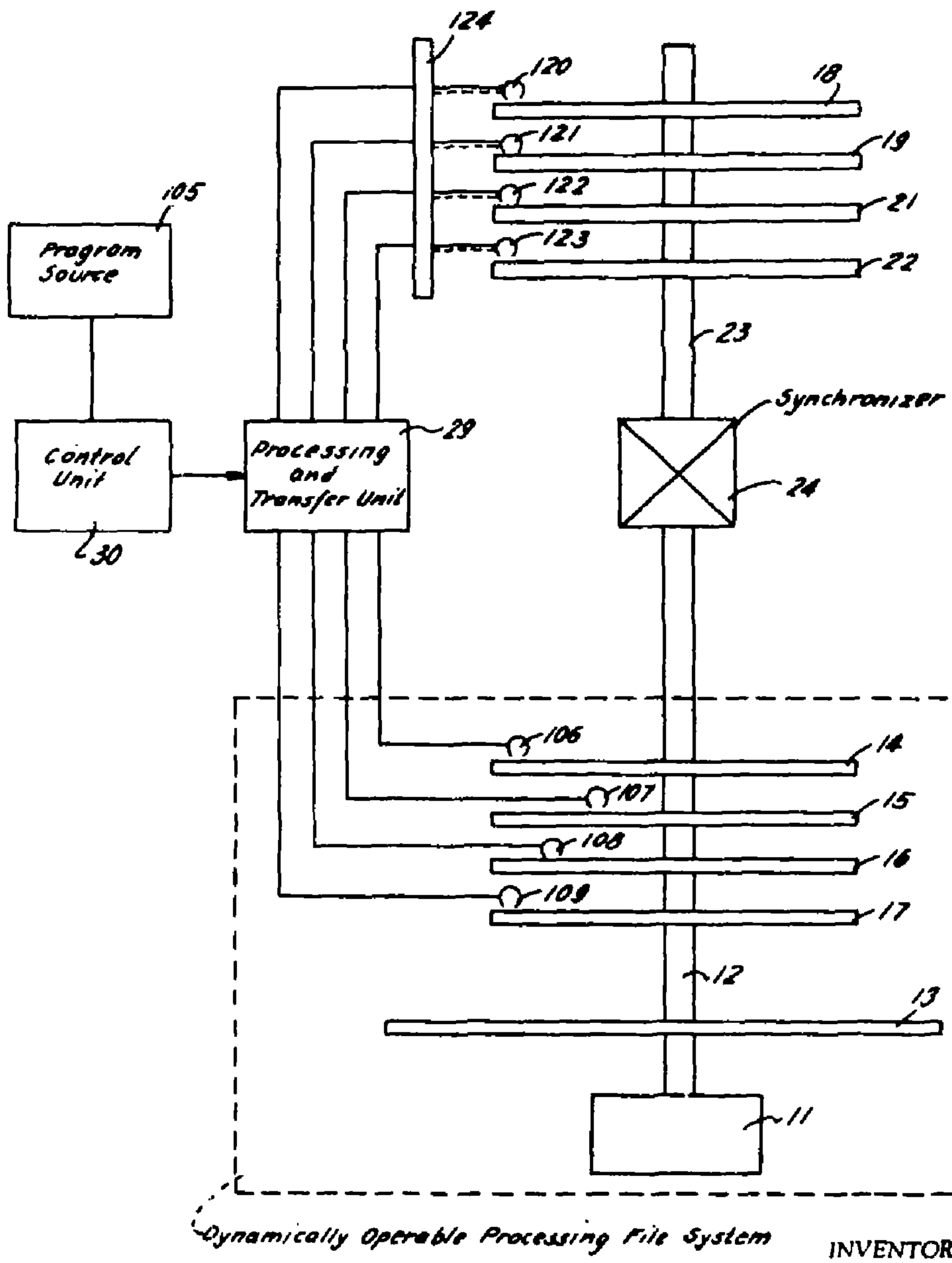

INVENTOR.
GERHARD DIRKS

BY Michael S. Striker

ATTORNEY

FIG. 13 b

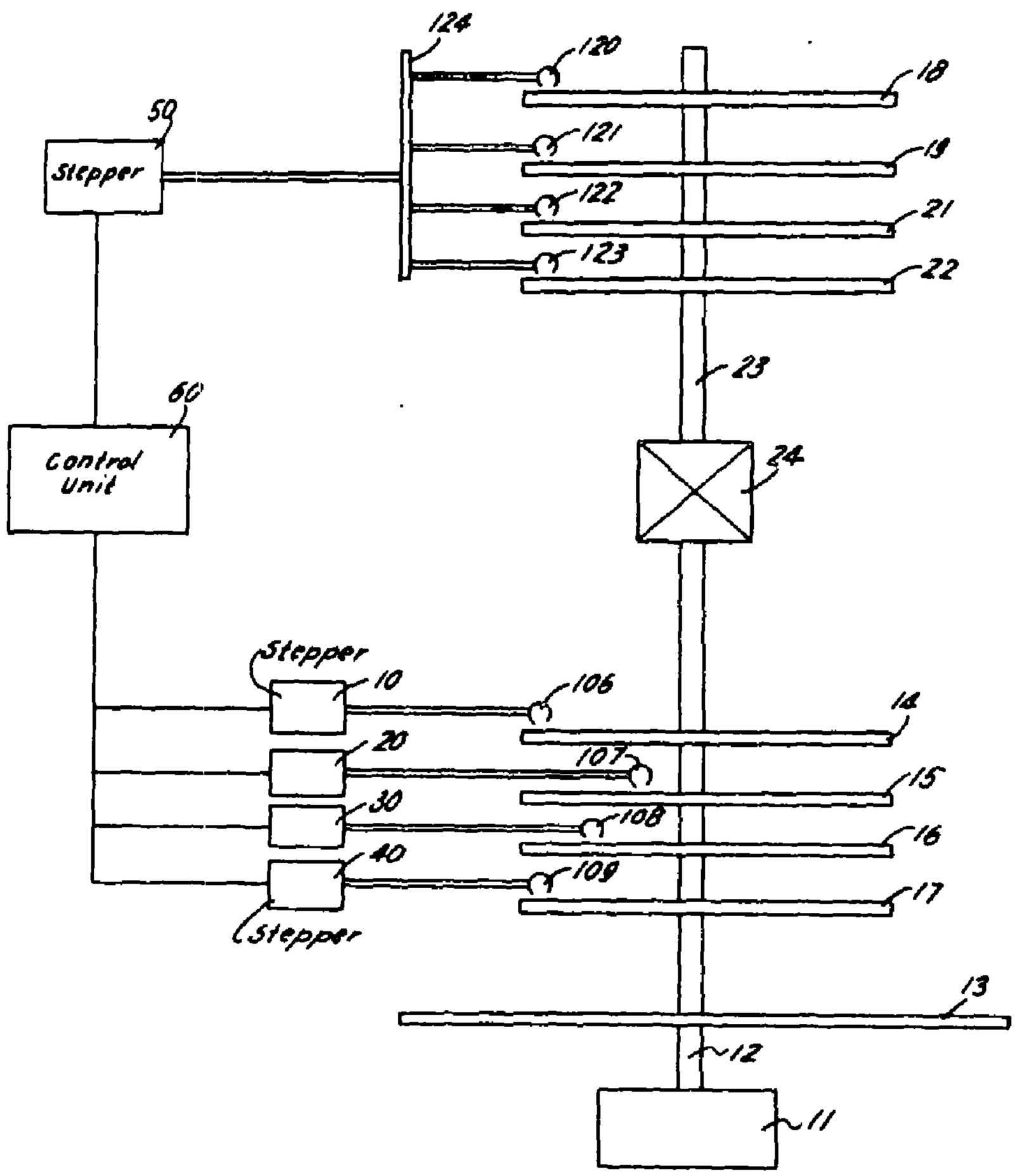

INVENTOR
GERHARD DIRKS
BY Michael S. Striker
ATTORNEY

DATA HANDLING SYSTEM

Filed Aug. 9. 1963 183 Sheets-Sheet 14

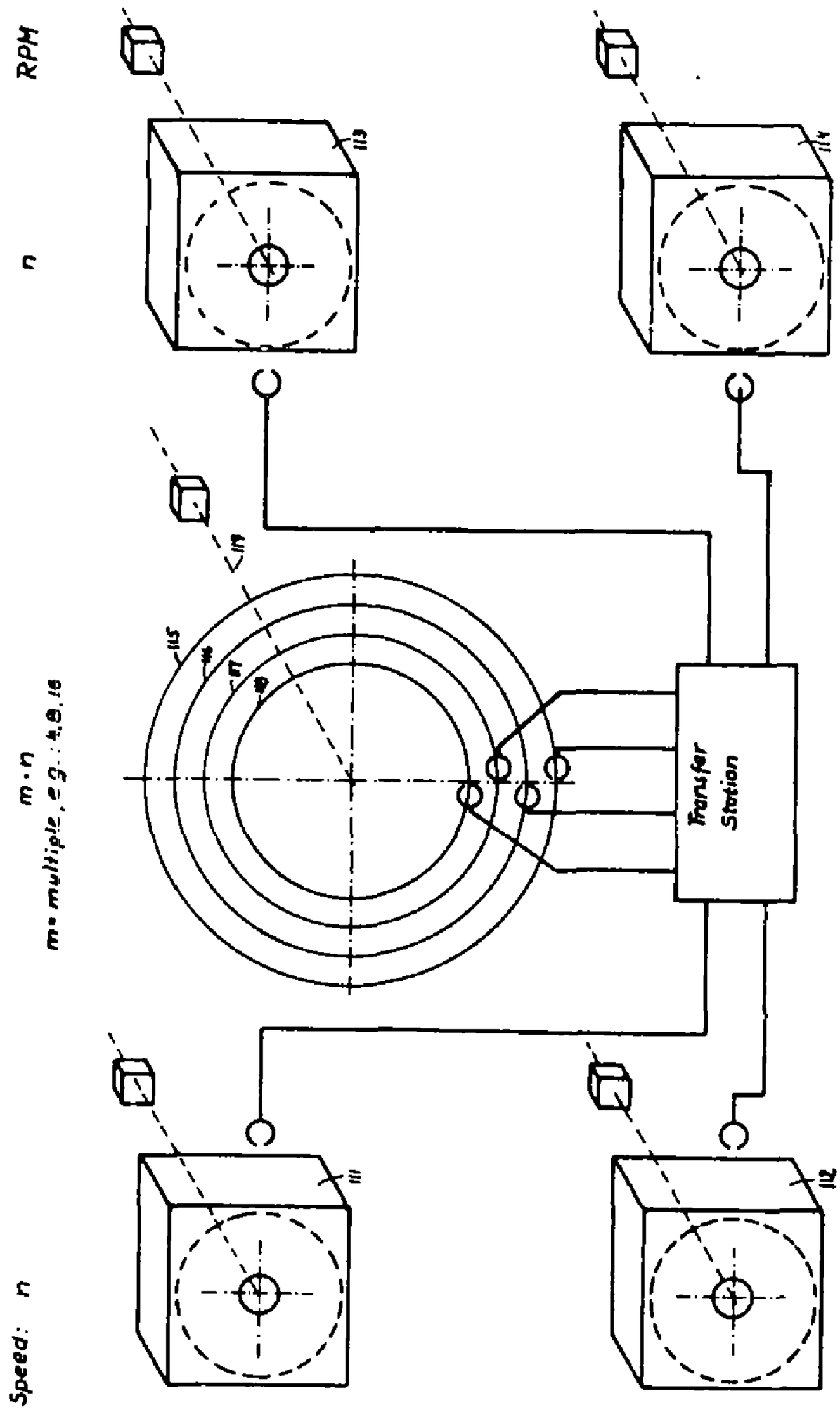

FIG. 14

INVENTOR
GERHARD DIRKS
BY Michael S. Striker
ATTORNEY

DATA HANDLING SYSTEM

Filed Aug. 9, 1963 183 Sheets-Sheet 15

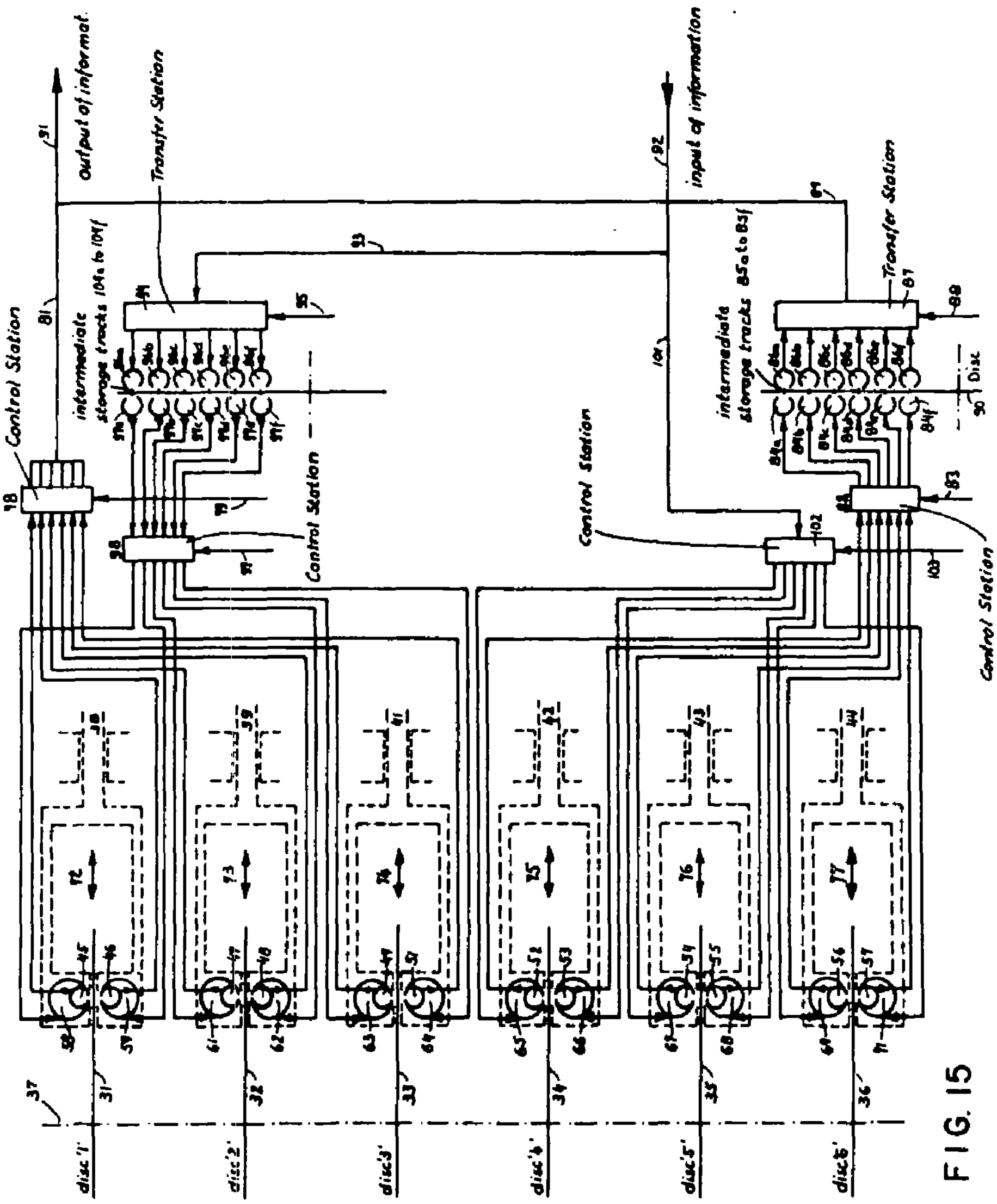

FIG. 15

INVENTOR.
GERHARD DIRKS

BY

Michael S. Striker

ATTORNEY.

DATA HANDLING SYSTEM

Filed Aug. 9, 1963 163 Sheets-Sheet 16

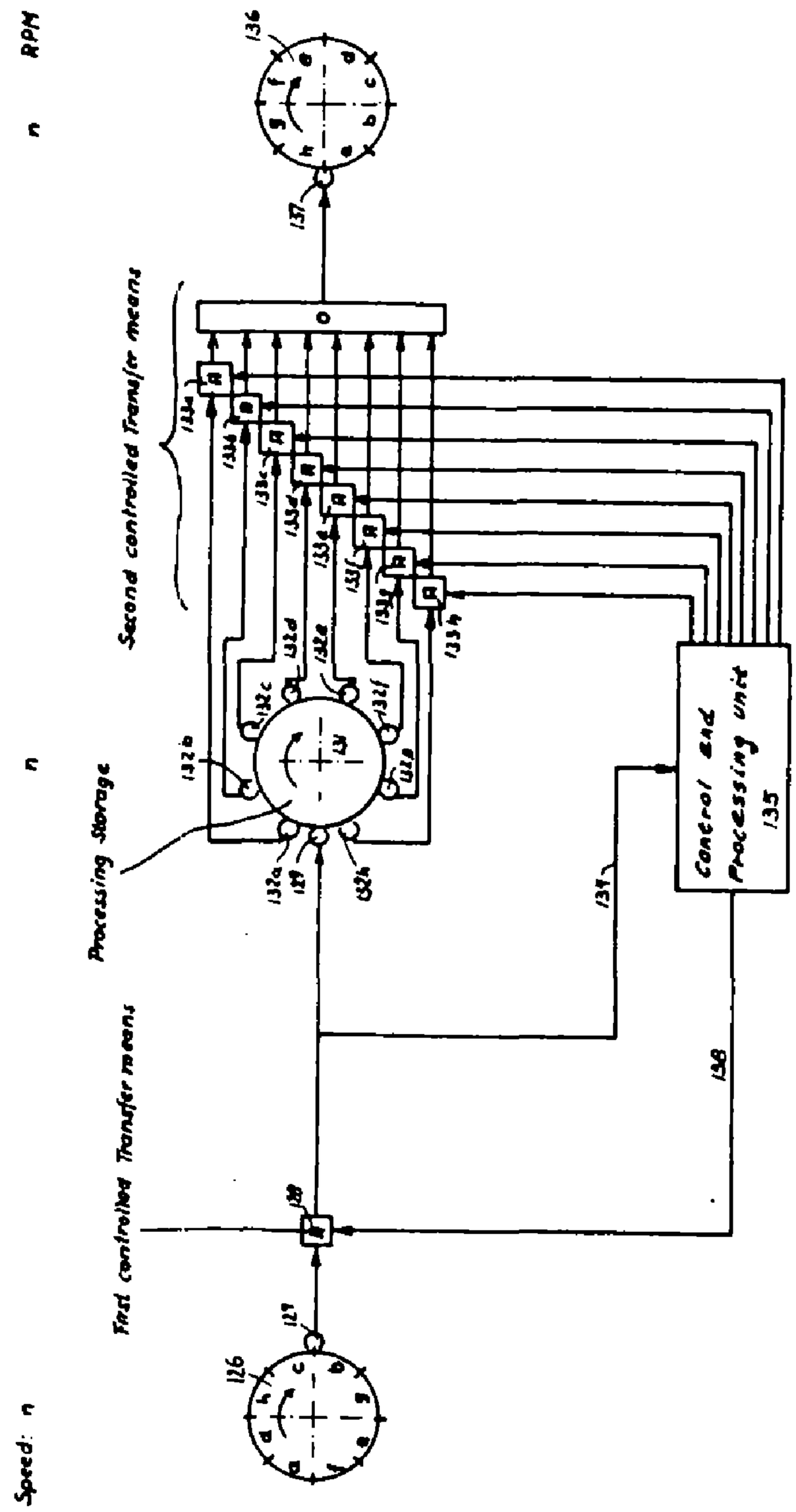

FIG.16

INVENTOR
GERHARD DIRKS
BY
Michael S. Striker
ATTORNEY

DATA HANDLING SYSTEM

Filed Aug. 9, 1963 183 Sheets-Sheet 17

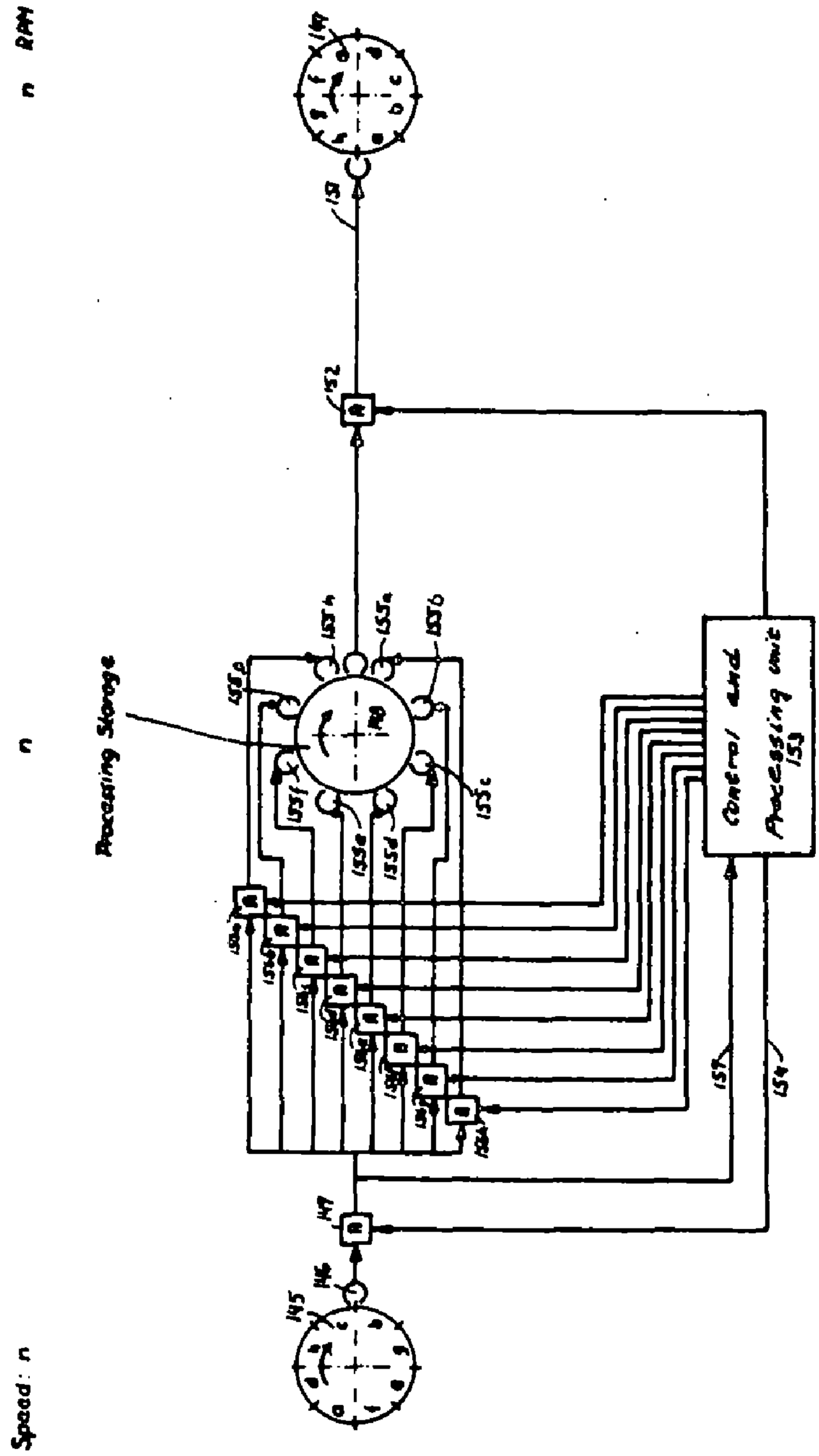

FIG. 17

INVENTOR.
GERHARD DIRKS

BY

Michael S. Striker
ATTORNEY

DATA HANDLING SYSTEM

Filed Aug. 9, 1963 183 Sheets-Sheet 18

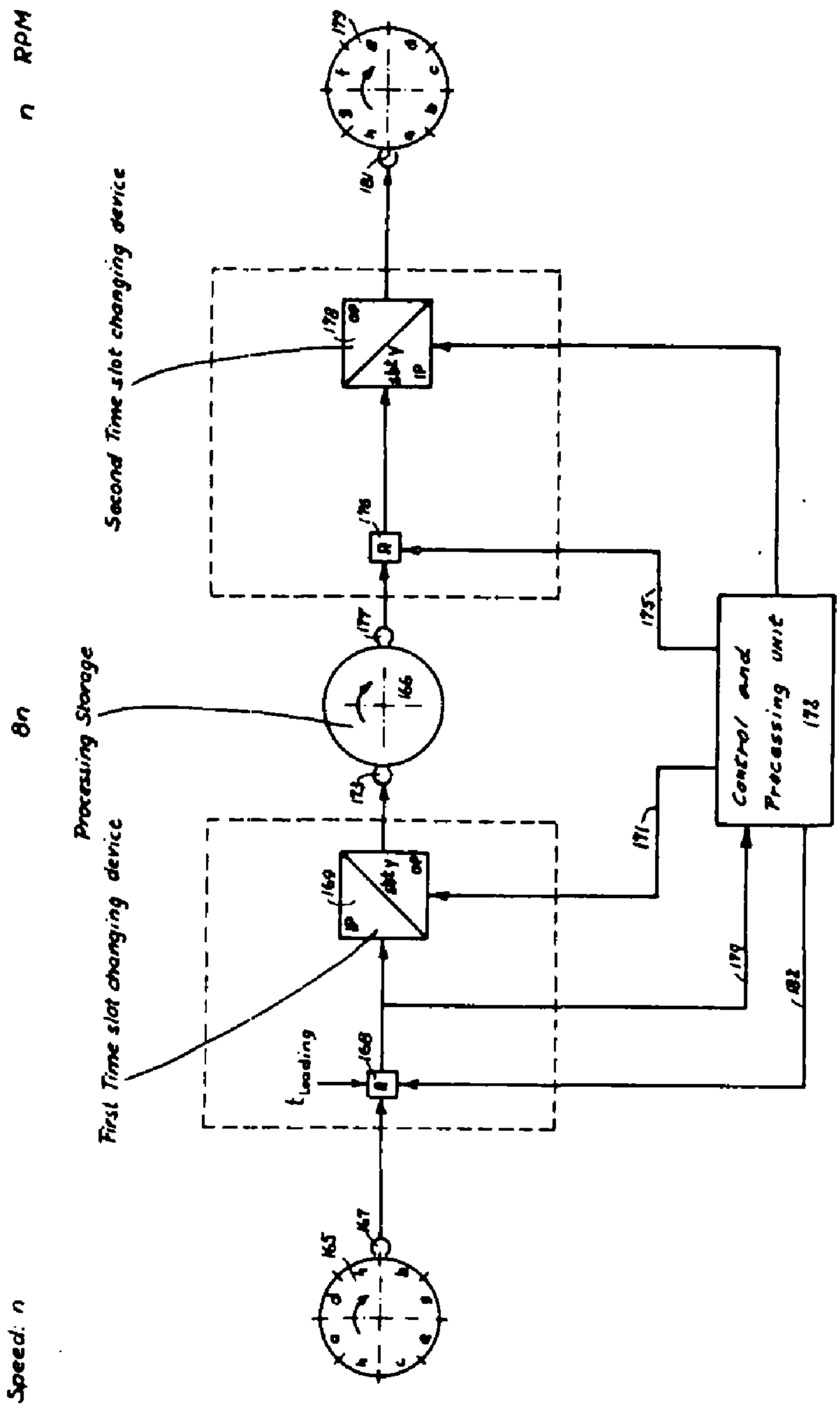

FIG.18

INVENTOR
GERHARD DIRKS
BY
Michael S. Striker
ATTORNEY

DATA HANDLING SYSTEM

Filed Aug. 9, 1963 183 Sheets-Sheet 19

FIG. 19a

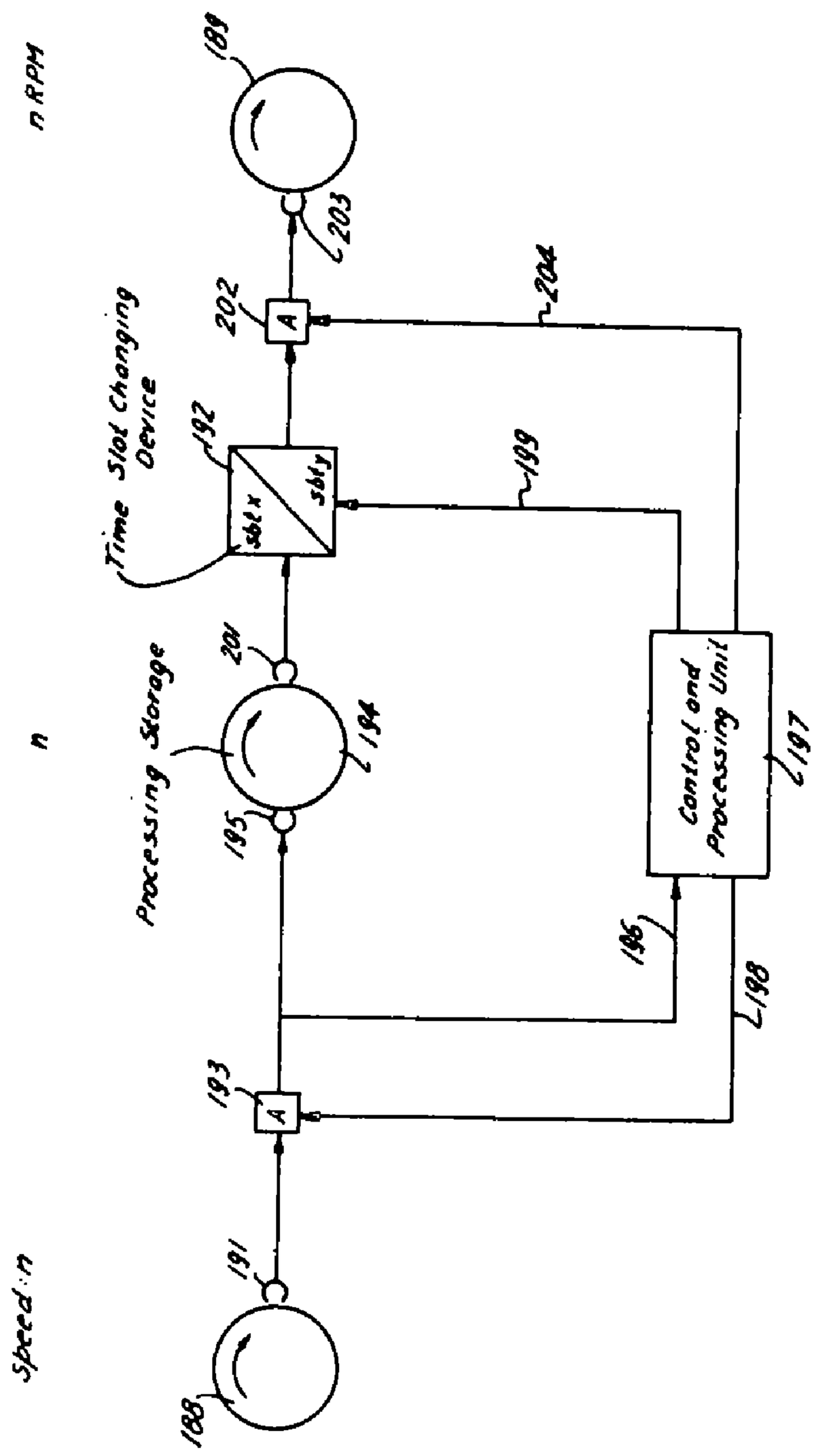

INVENTOR.
GERHARD DIRKS

BY

Michael S. Striker
ATTORNEY

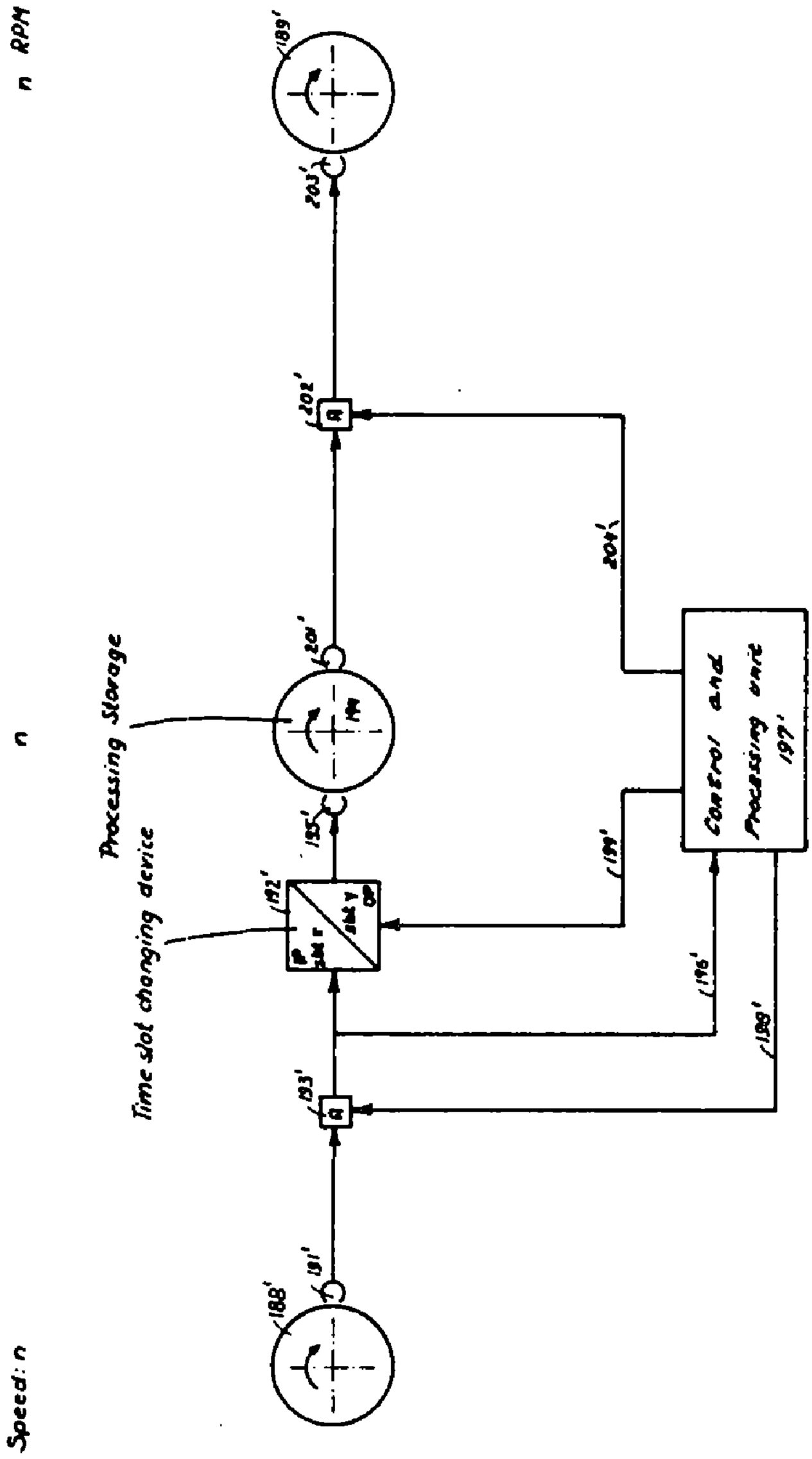

FIG. 19b

INVENTOR
GERHARD DIRKS

BY Michael S. Striker

ATTORNEY

DATA HANDLING SYSTEM

Filed Aug. 9, 1963 183 Sheets-Sheet 31

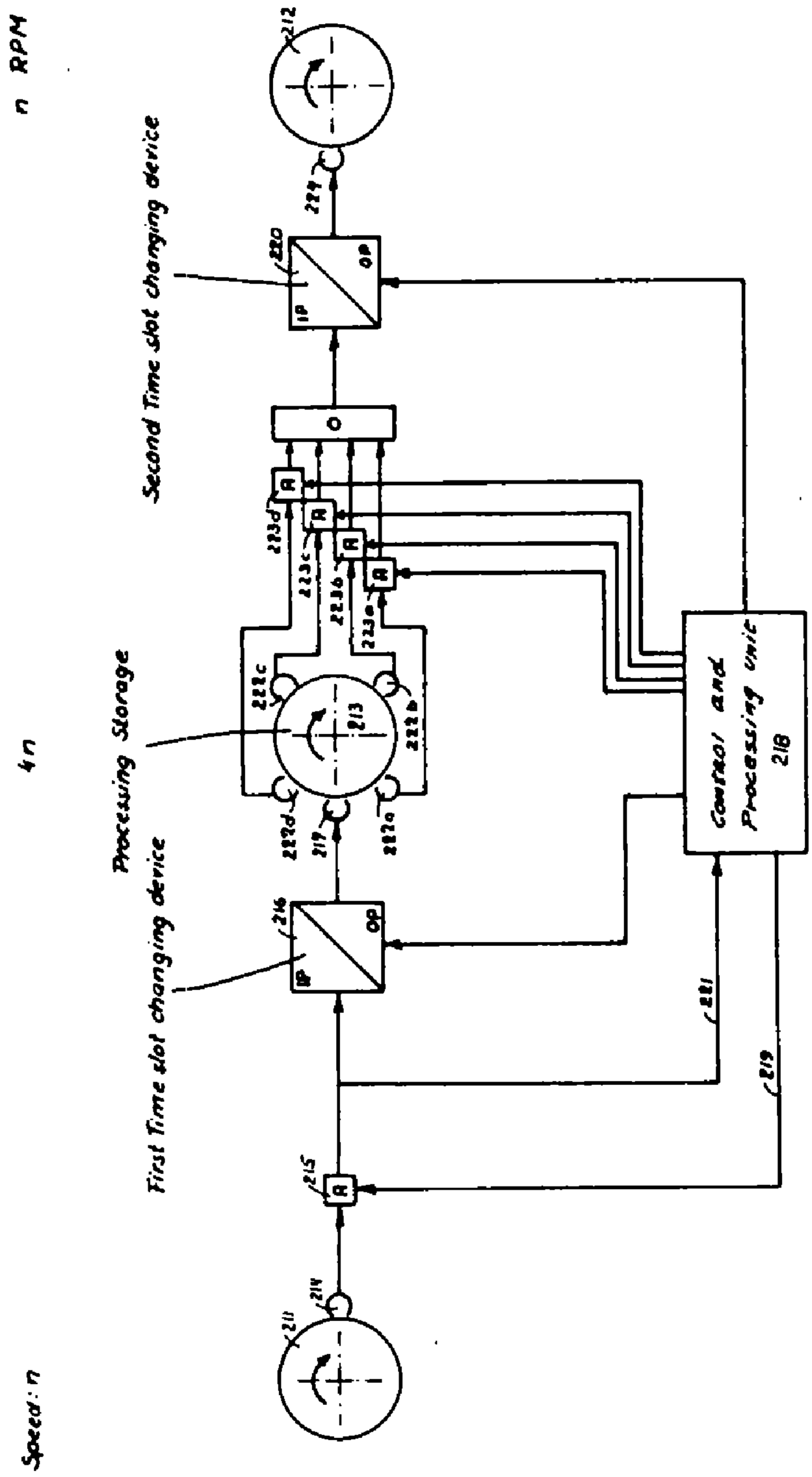

FIG. 20

INVENTOR
GERHARD DIRKS

BY Michael S. Striker
ATTORNEY

DATA HANDLING SYSTEM

Filed Aug. 9, 1963 183 Sheets-Sheet 22

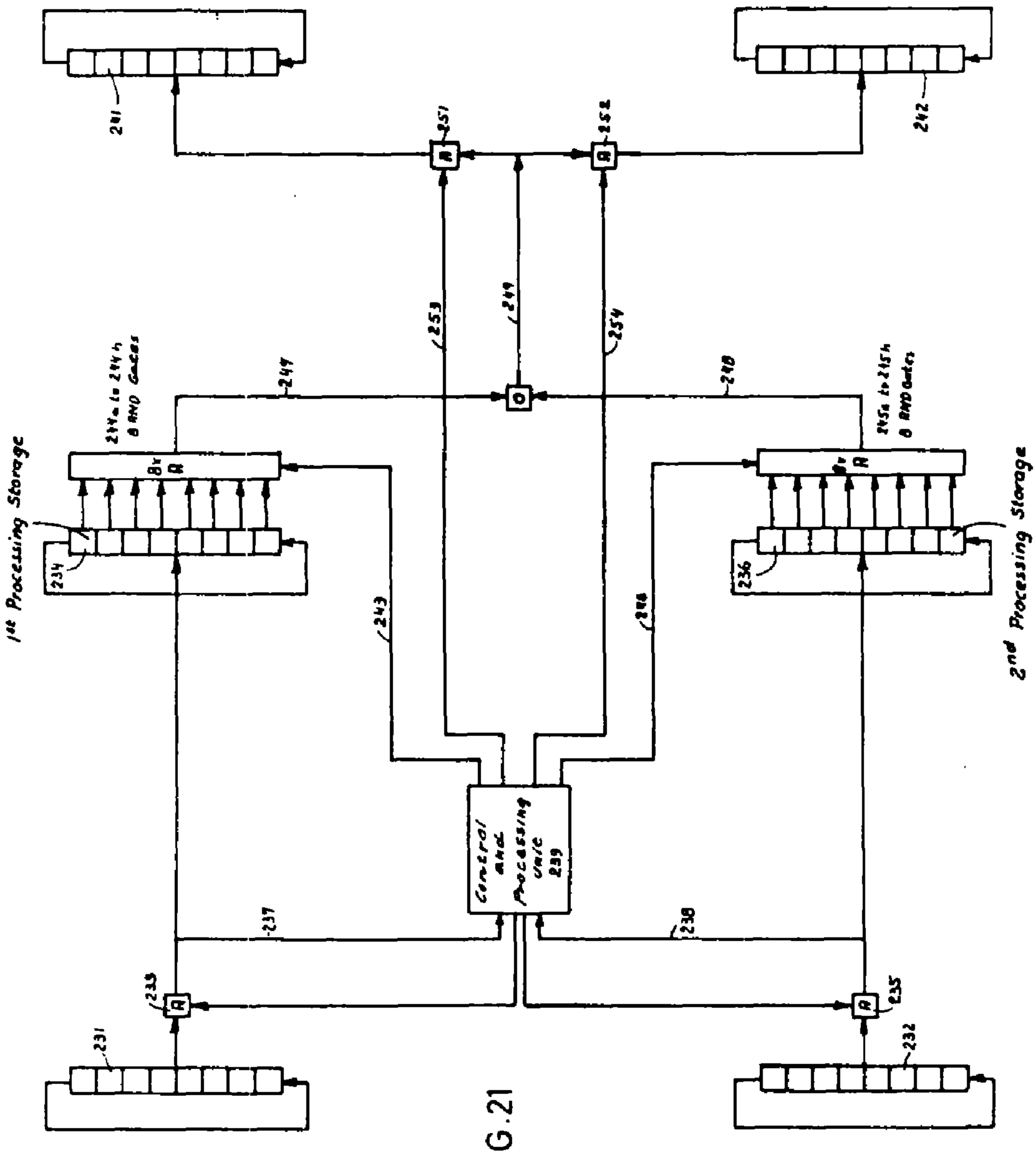

FIG. 21

INVENTOR.
GERHARD DIRKS

BY

Michael S. Striker

ATTORNEY

DATA HANDLING SYSTEM

Filed Aug. 9, 1963 183 Sheets-Sheet 13

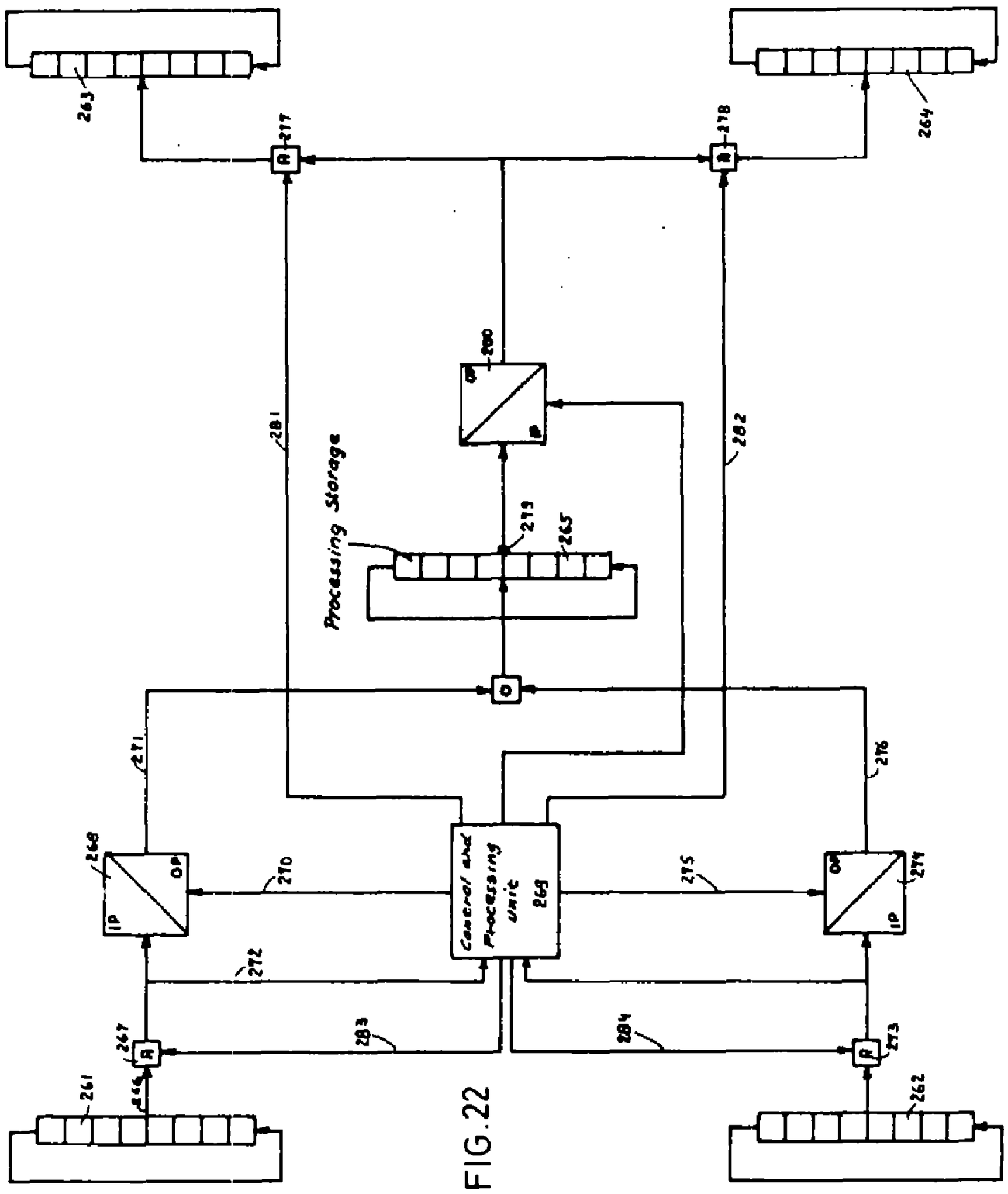

FIG. 22

INVENTOR
GERHARD DIRKS

BY

Michael S. Striker
ATTORNEY

DATA HANDLING SYSTEM

Filed Aug. 9, 1963 183 Sheets-Sheet 24

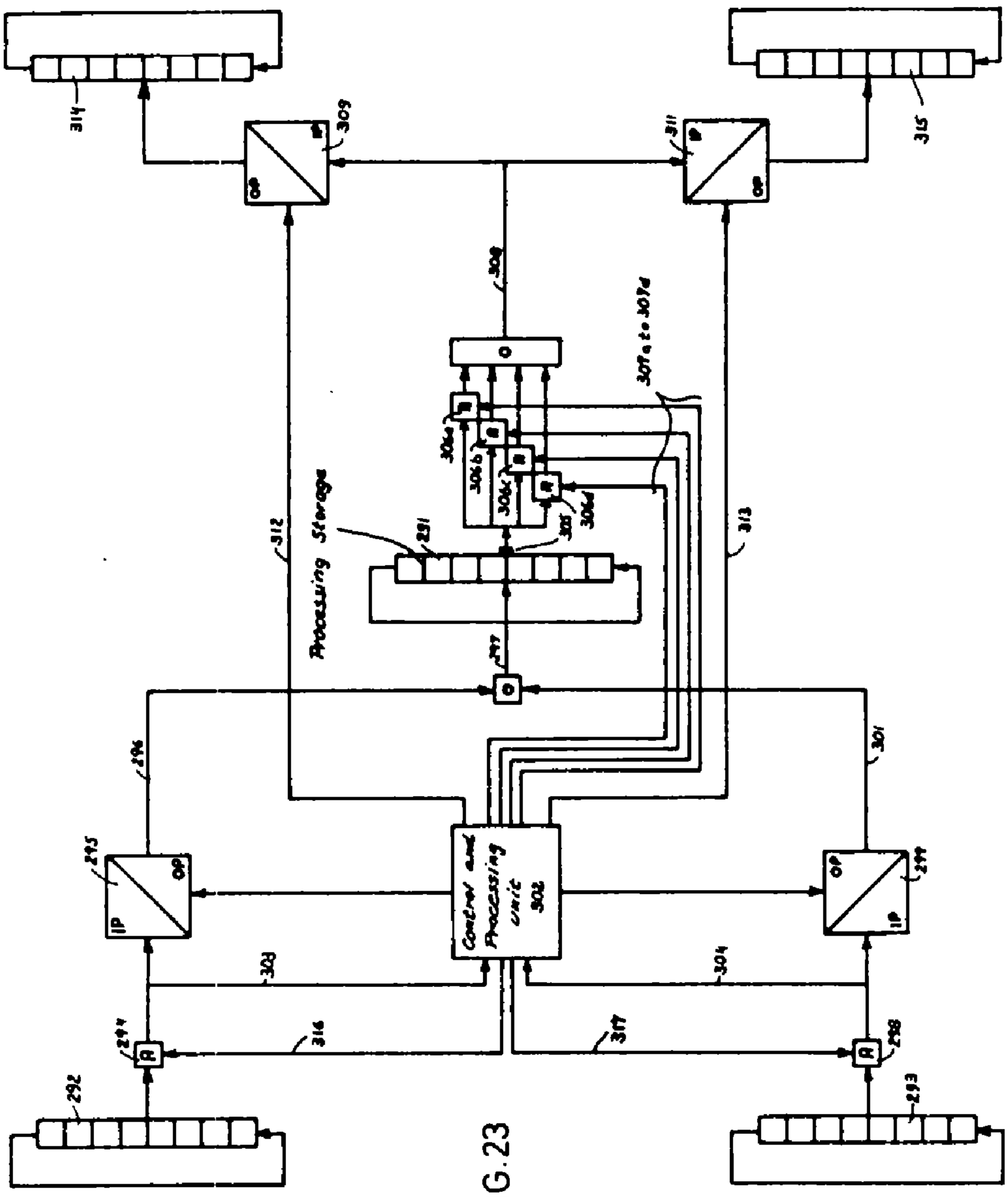

FIG. 23

INVENTOR
GERHARD DIRKS

BY

Michael S. Striker
ATTORNEY

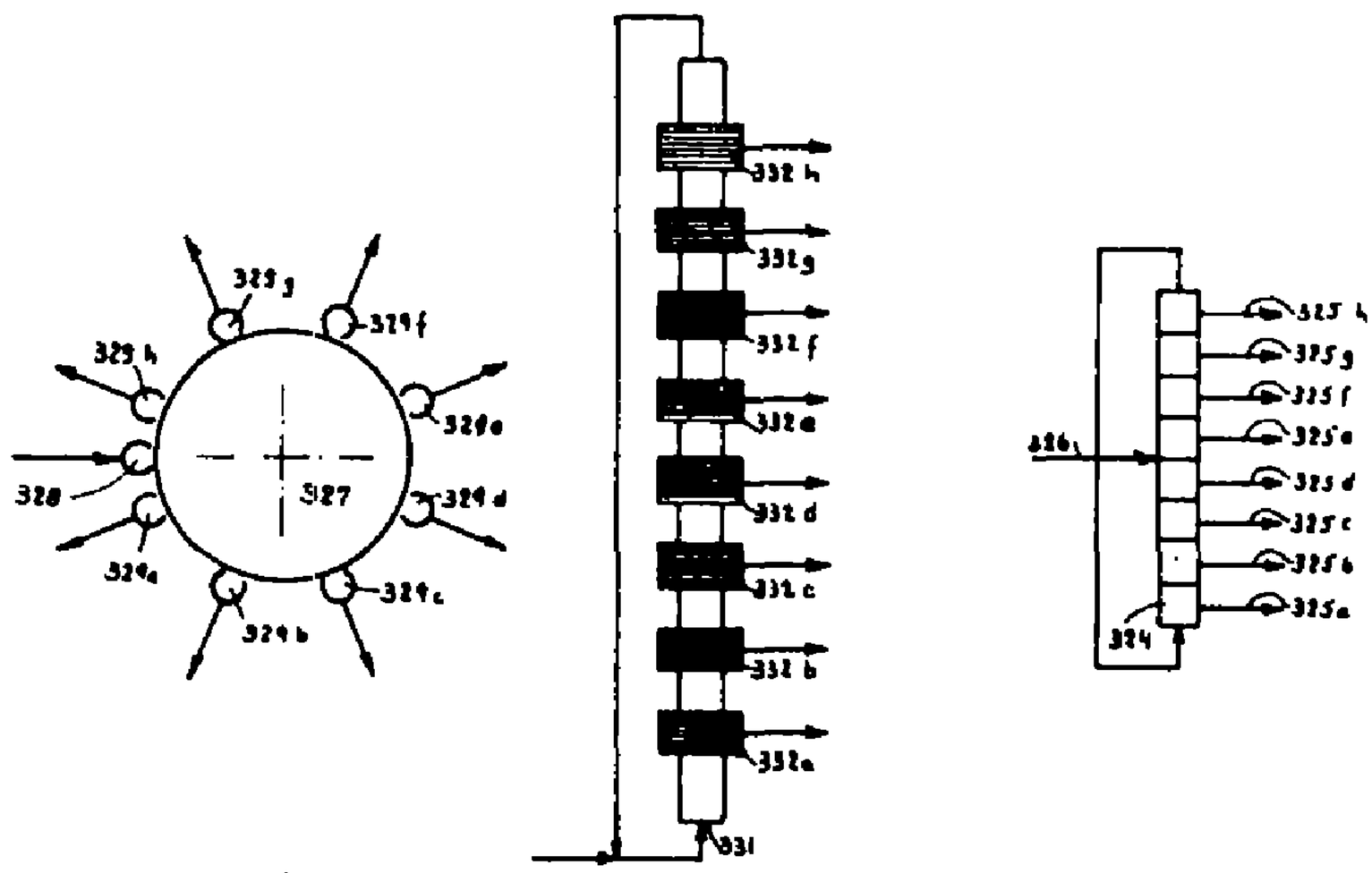

FIG.24

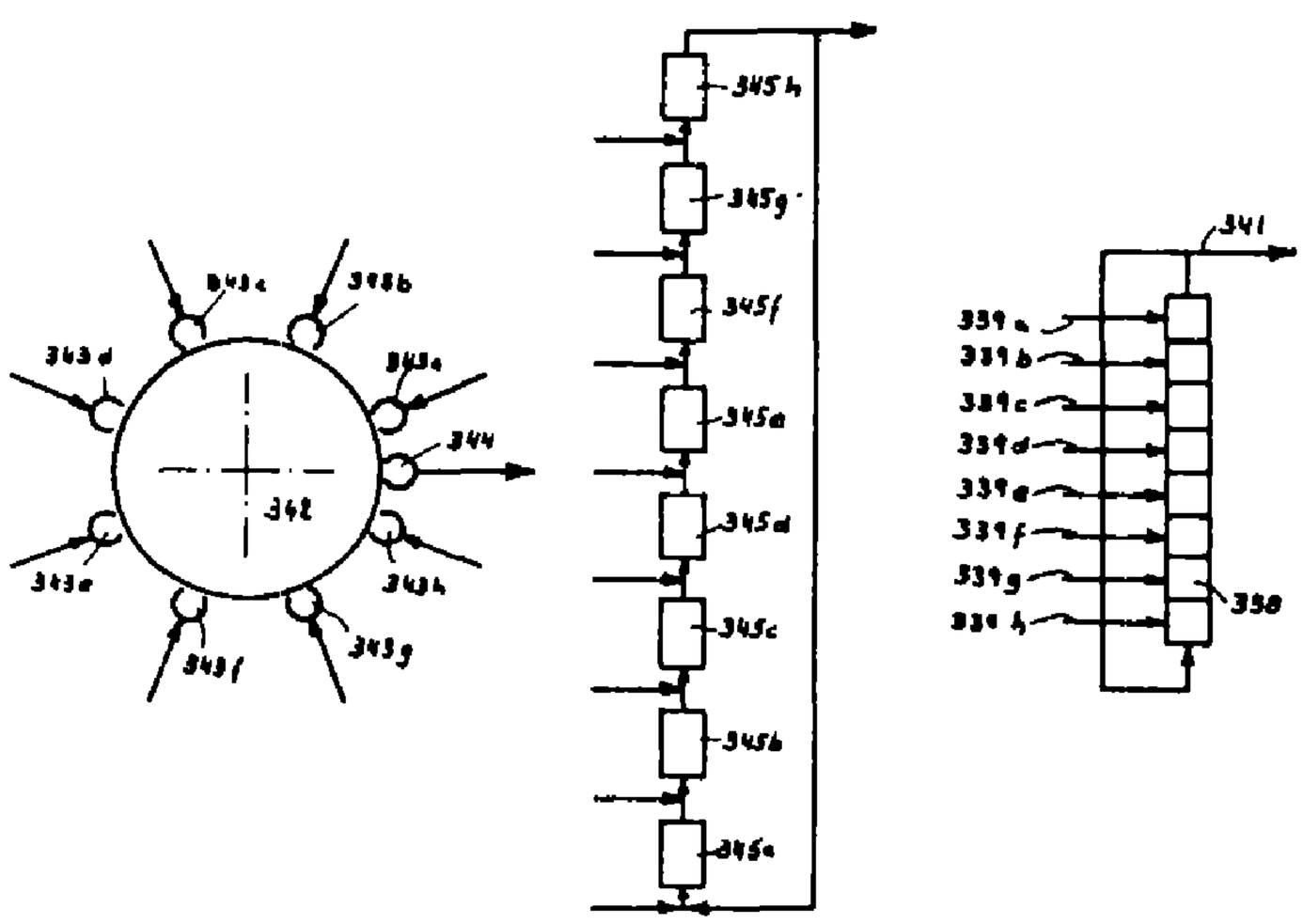

FIG.25

INVENTOR.
GERHARD DIRKS
BY
Michael S. Striker
ATTORNEY

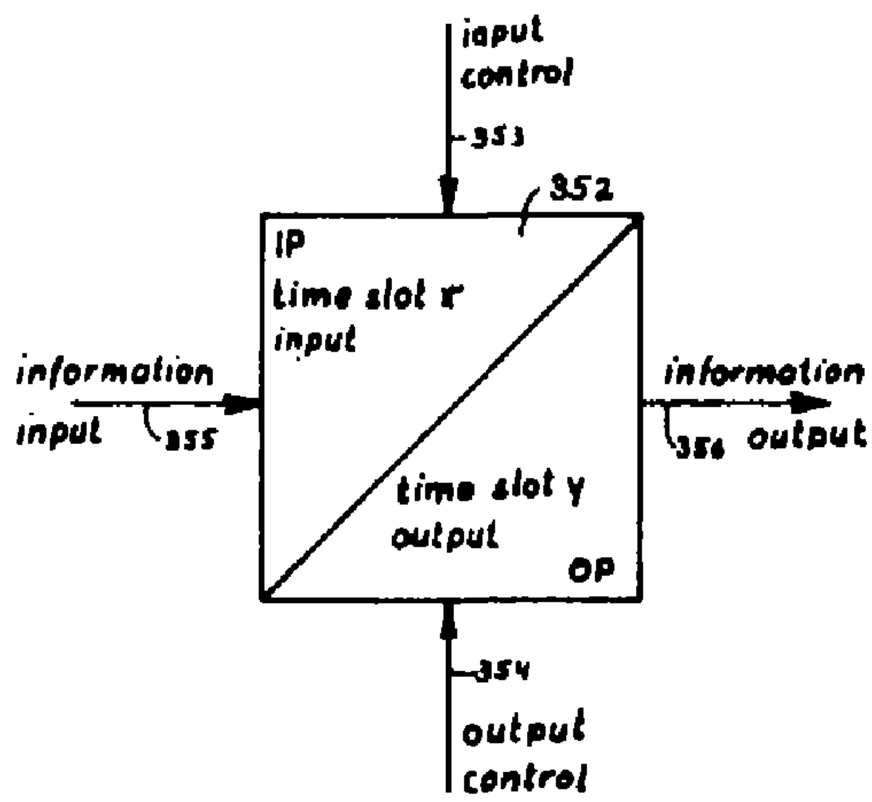

FIG. 26

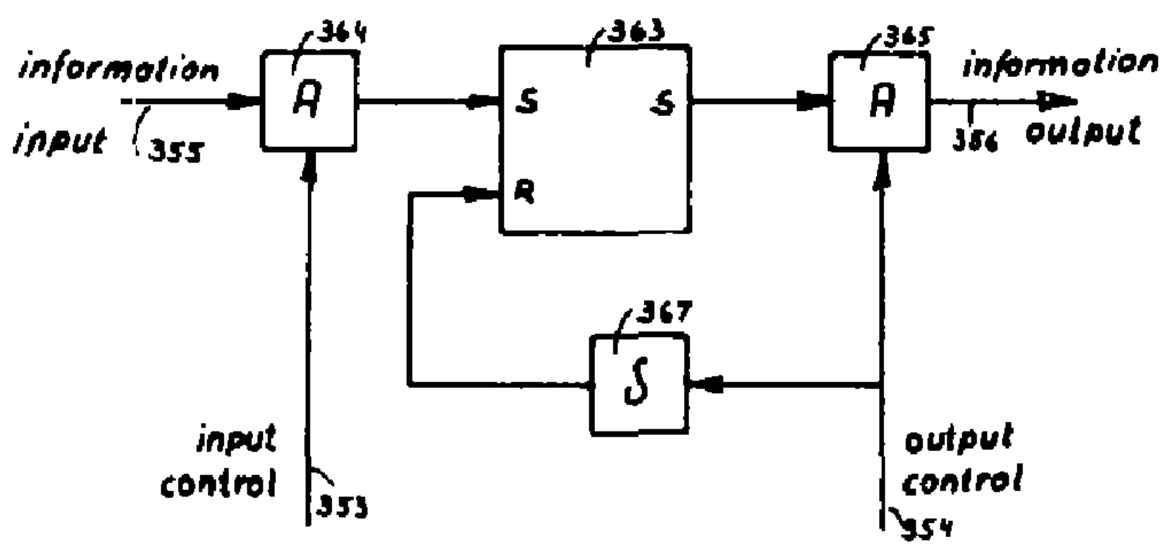

FIG. 27

INVENTOR.
GERHARD DIRKS

BY

Michael S. Striker
ATTORNEY

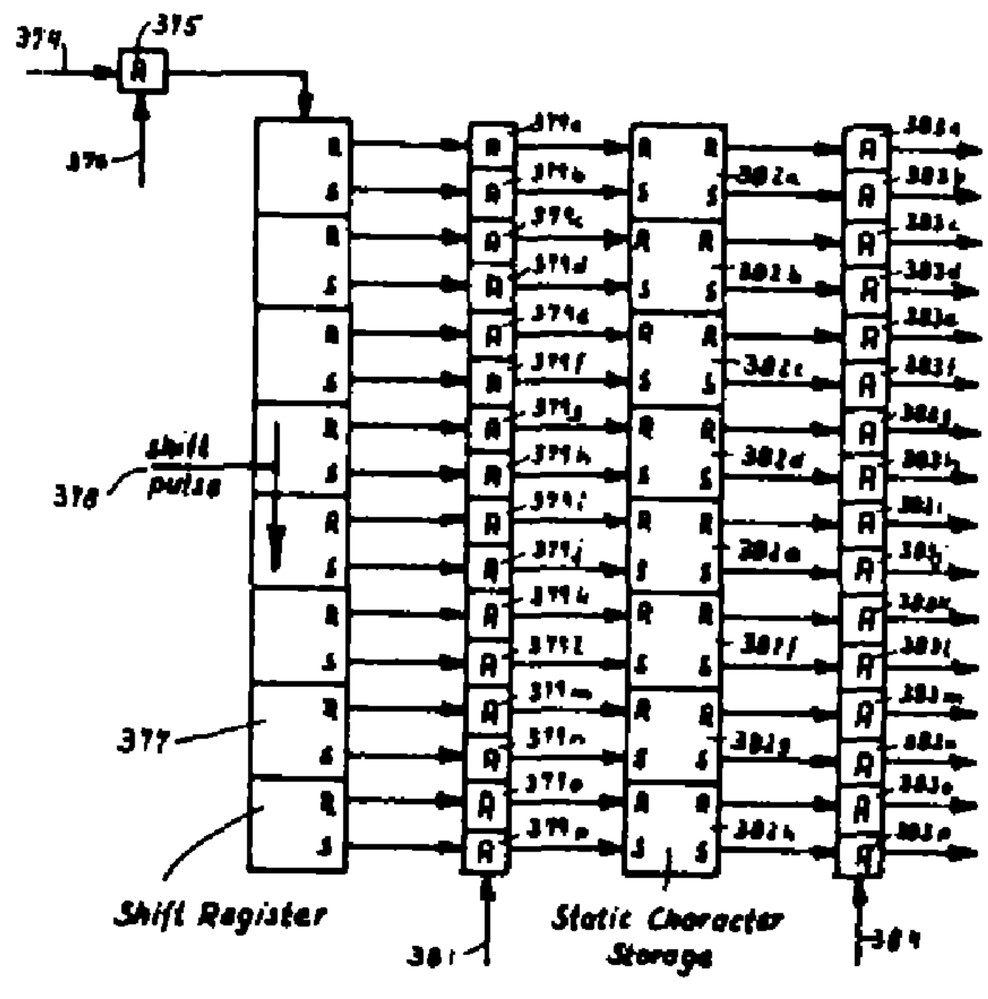

FIG. 28

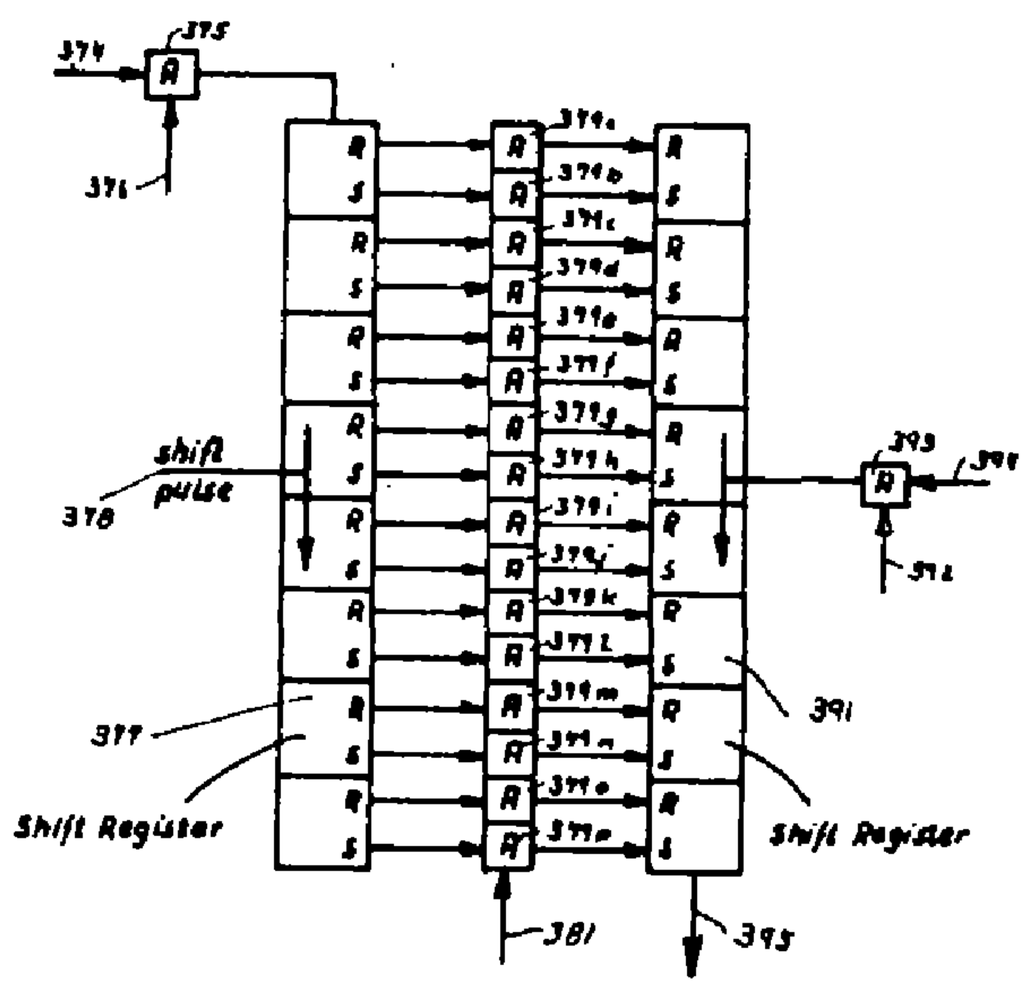

FIG. 29

INVENTOR
GERHARD DIRKS
BY
Michael S. Striker
ATTORNEY

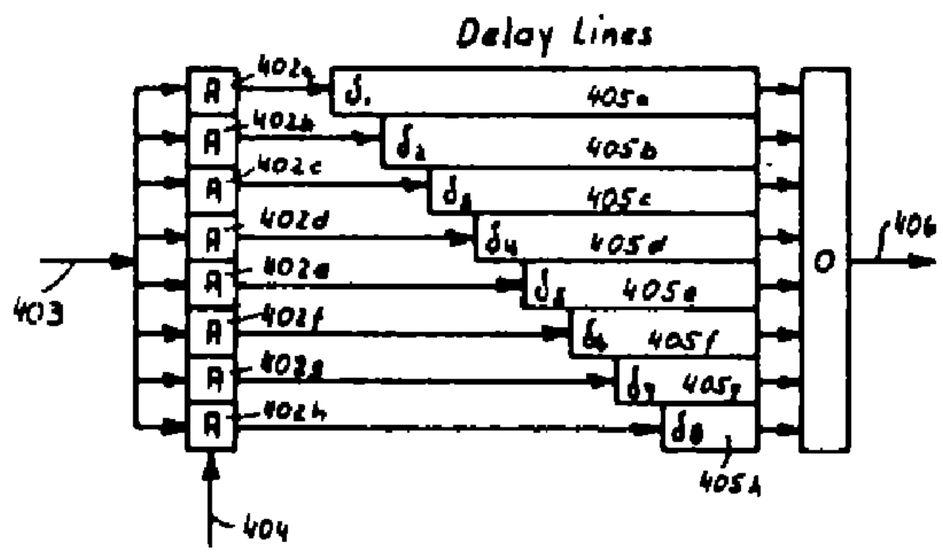

FIG. 30

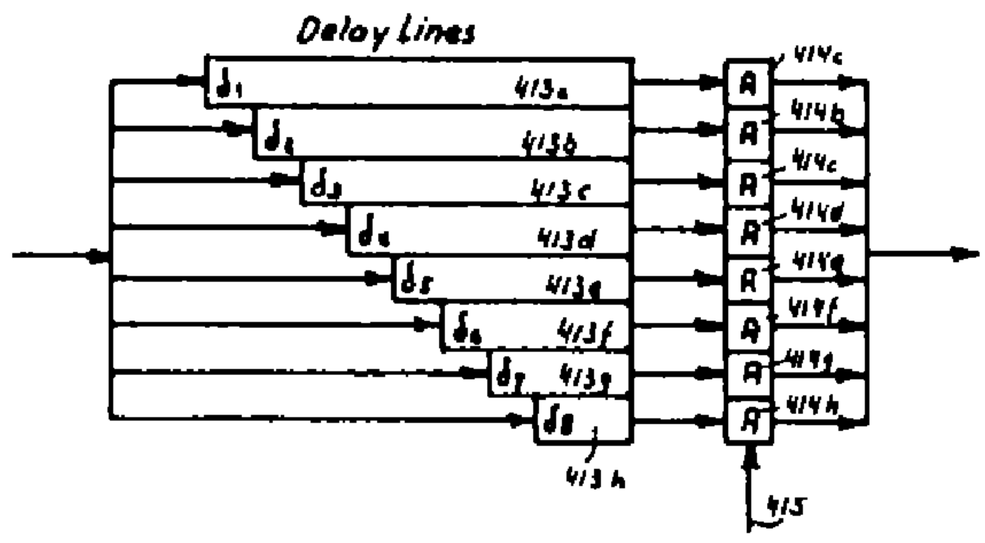

FIG. 31

INVENTOR.
GERHARD DIRKS

BY

Michael S. Striker

ATTORNEY

DATA HANDLING SYSTEM

Filed Aug. 9, 1963 183 Sheets-Sheet 29

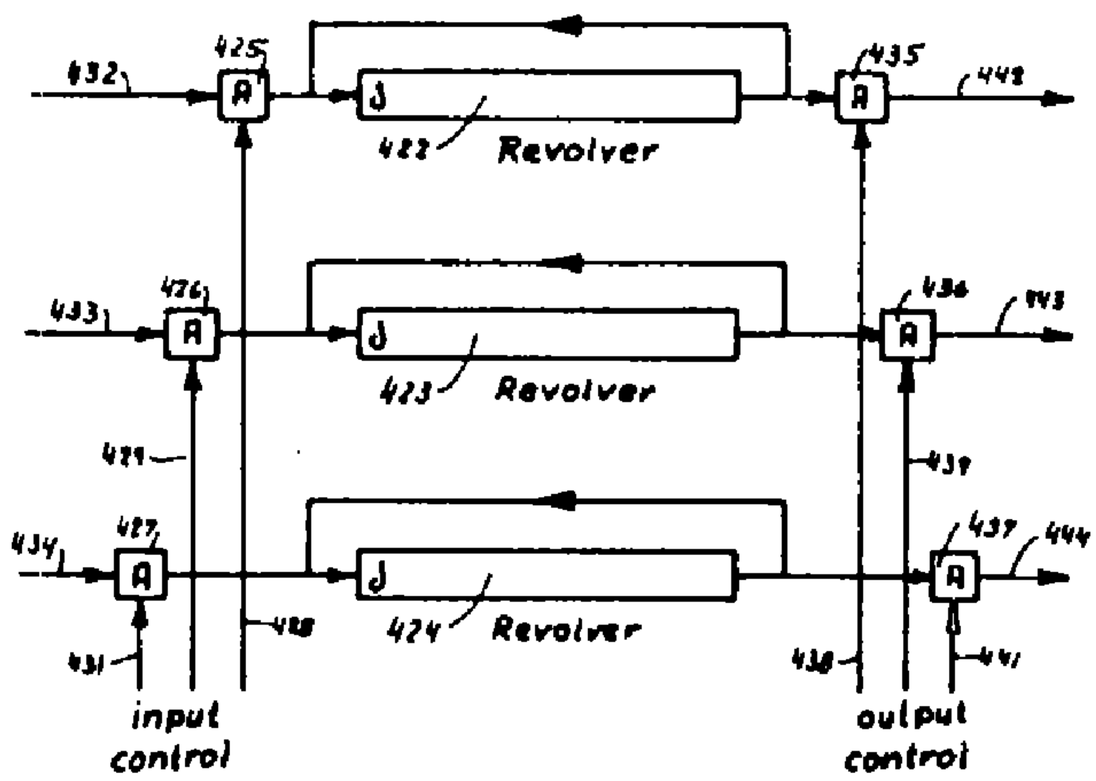

FIG. 32

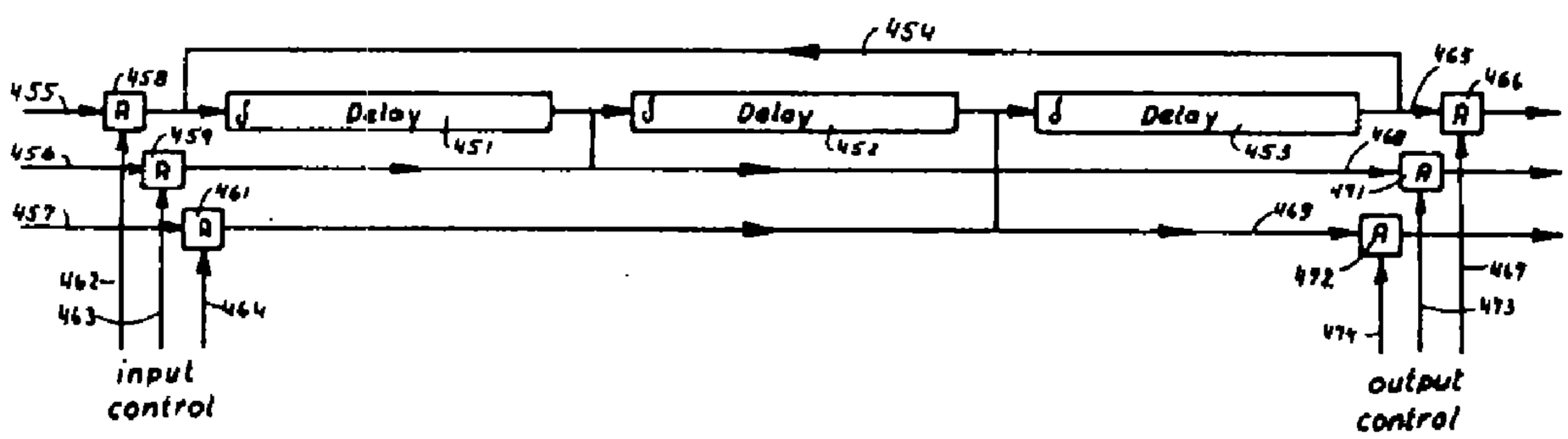

FIG. 33

INVENTOR.
GERHARD DIRKS
BY
Michael S. Striker
ATTORNEY

FIG. 34a

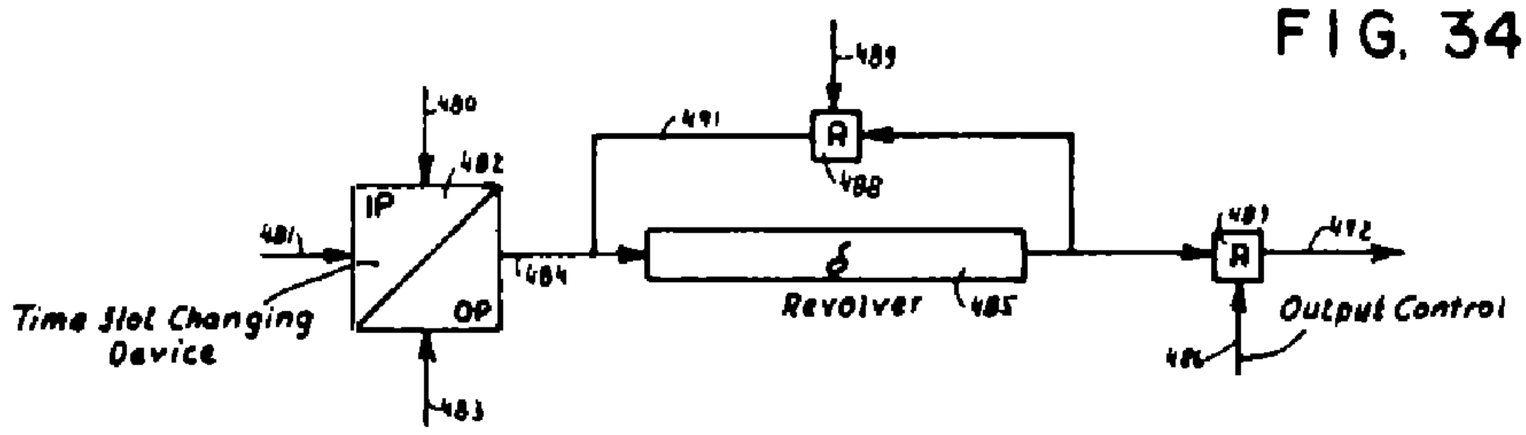

FIG. 34b

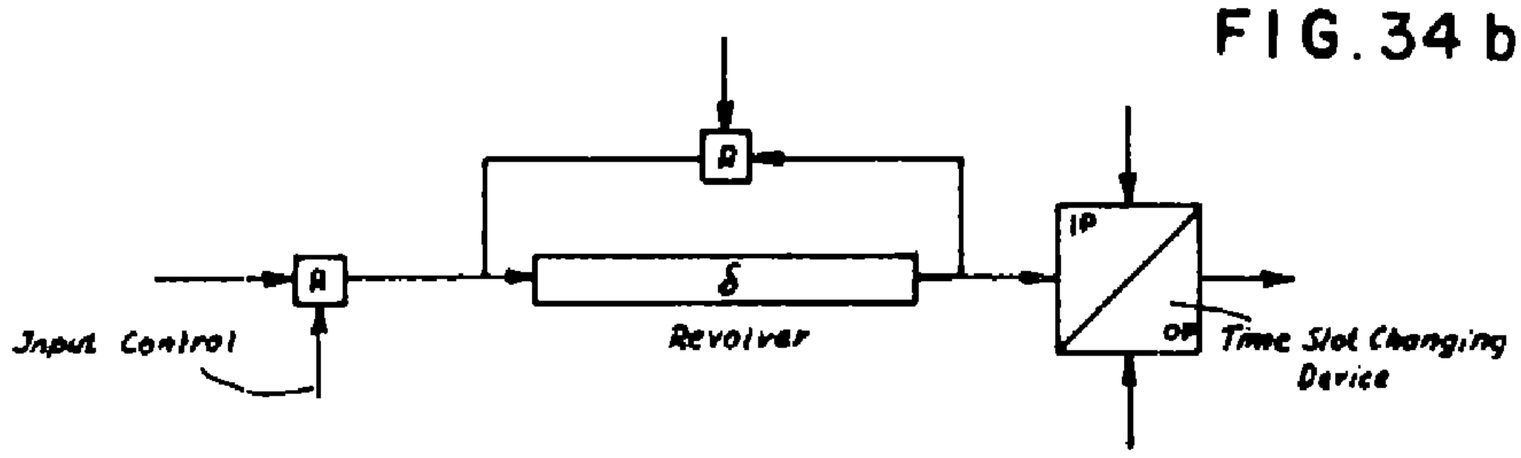

FIG. 34c

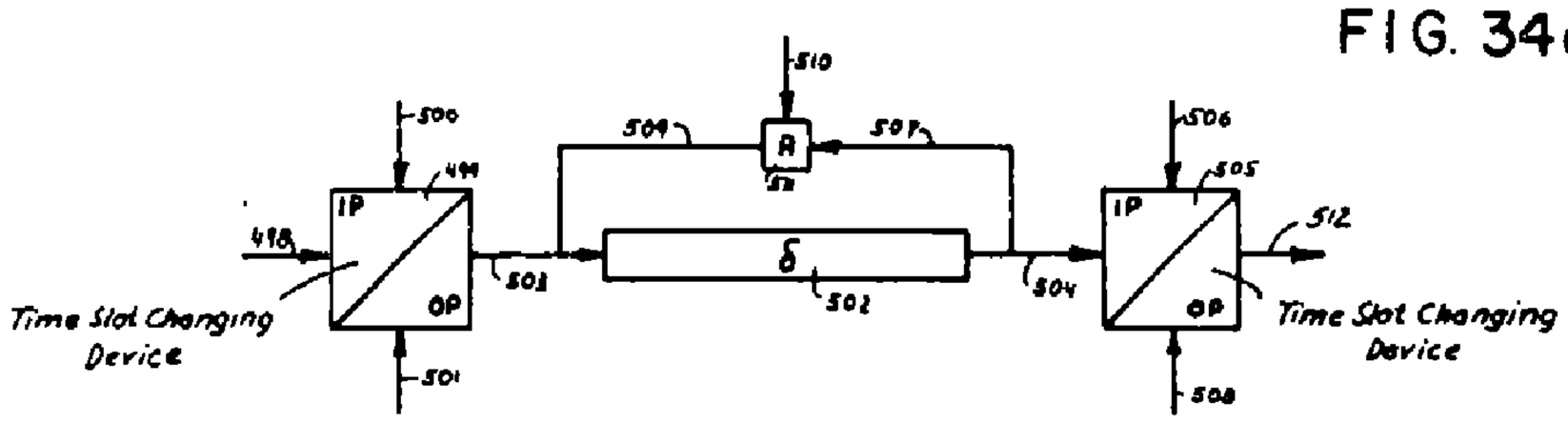

INVENTOR.
GERHARD DIRKS

BY

Michael S. Striker

ATTORNEY

FIG. 35a

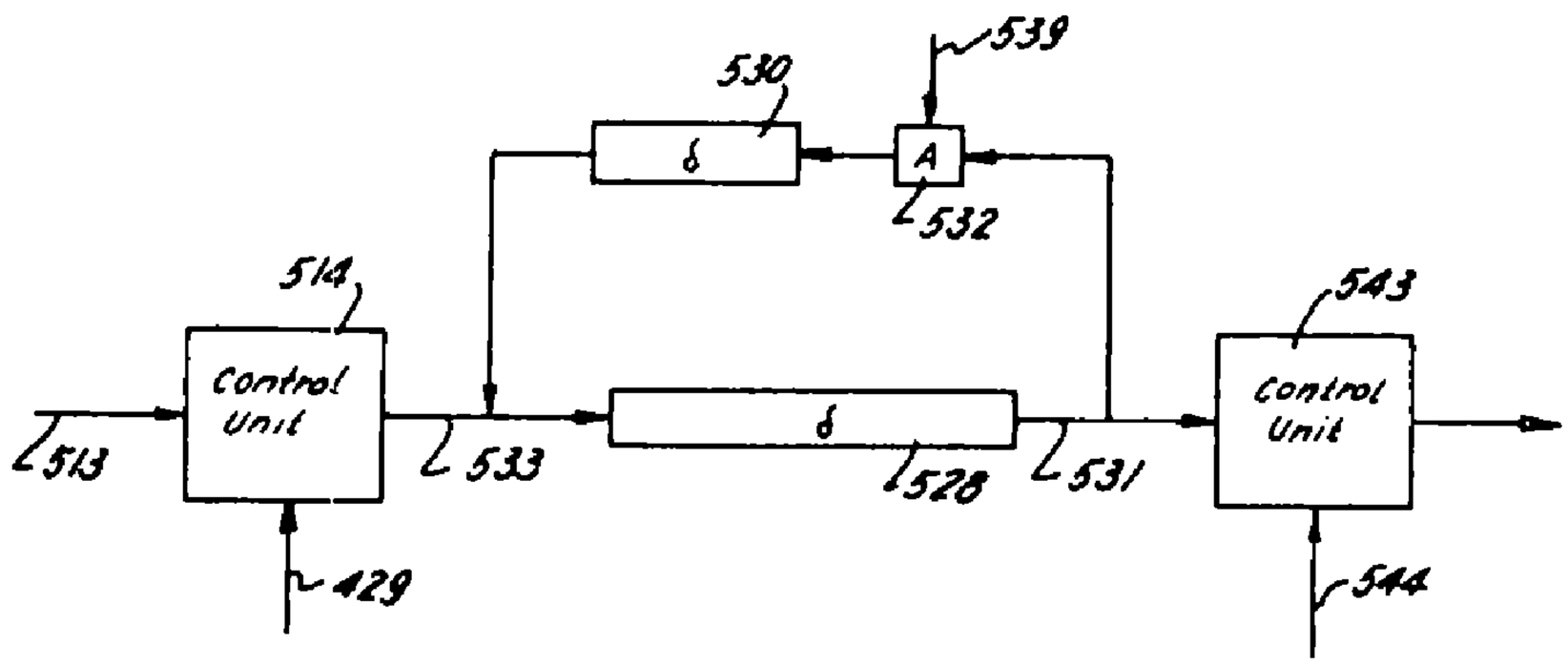

FIG. 35b

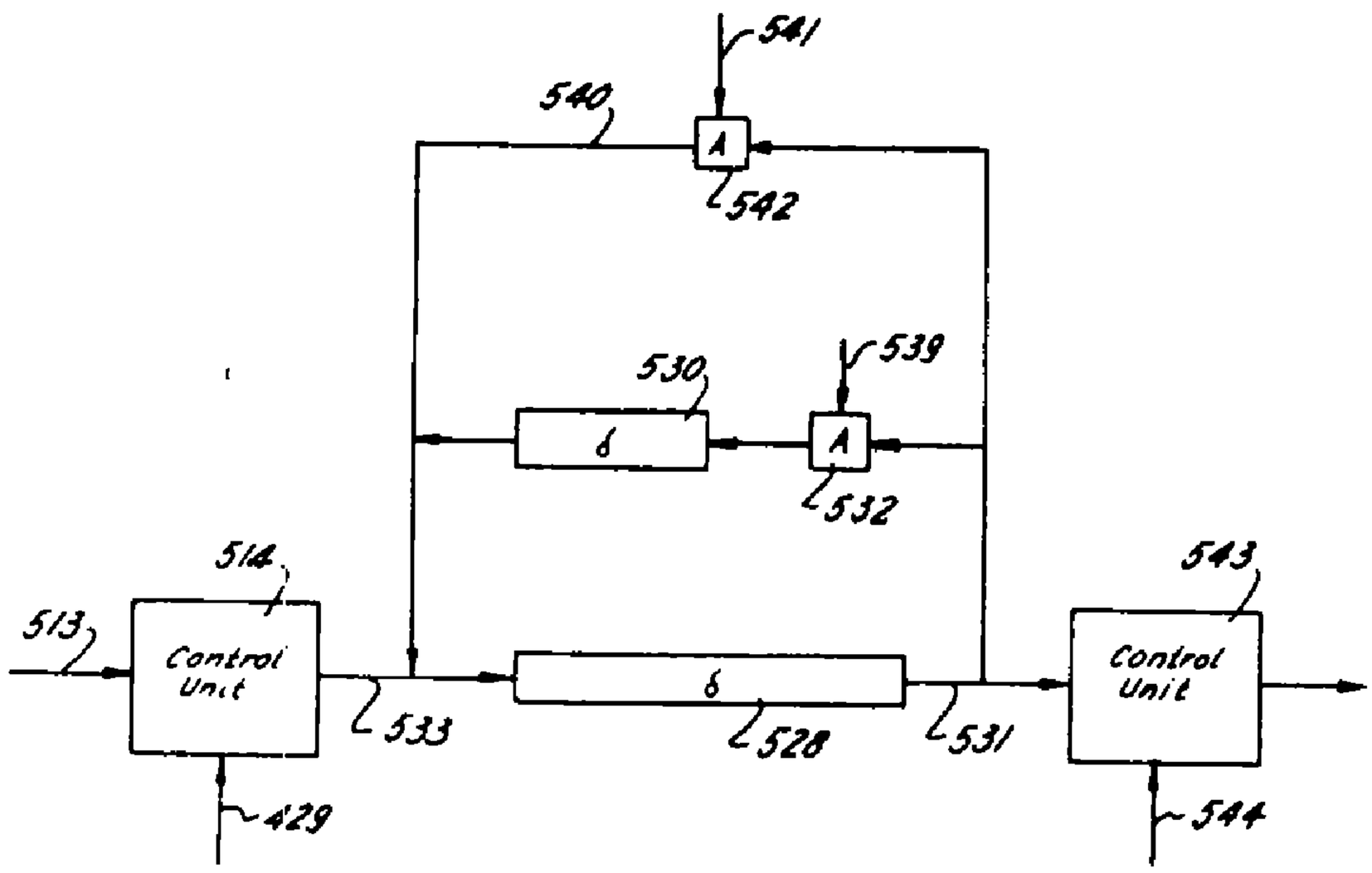

INVENTOR
GERHARD DIRKS
BY Michael S. Striker
ATTORNEY

DATA HANDLING SYSTEM

Filed Aug. 9, 1963 183 Sheets-Sheet 32

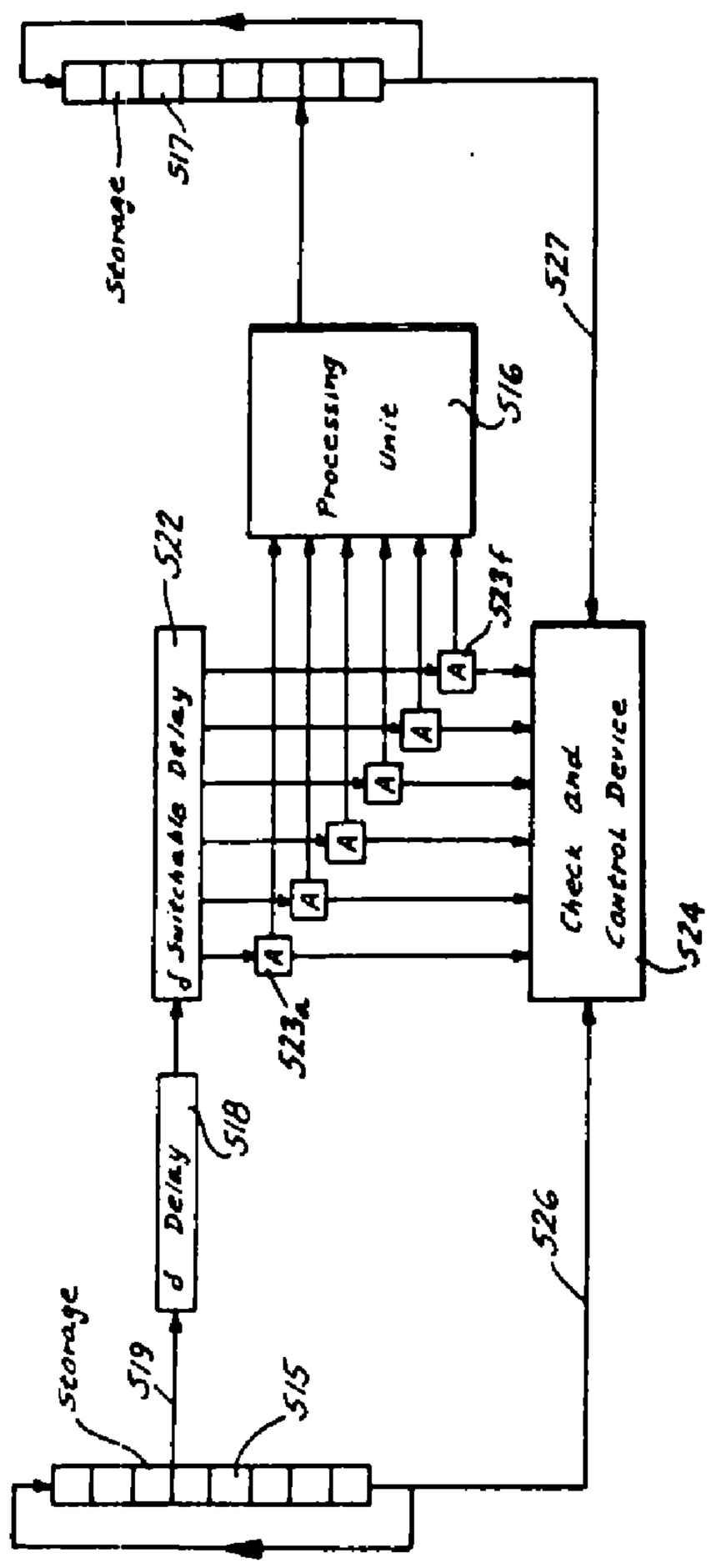

FIG. 36

INVENTOR
GERHARD DIRKS
BY
Michael S. Striker
ATTORNEY

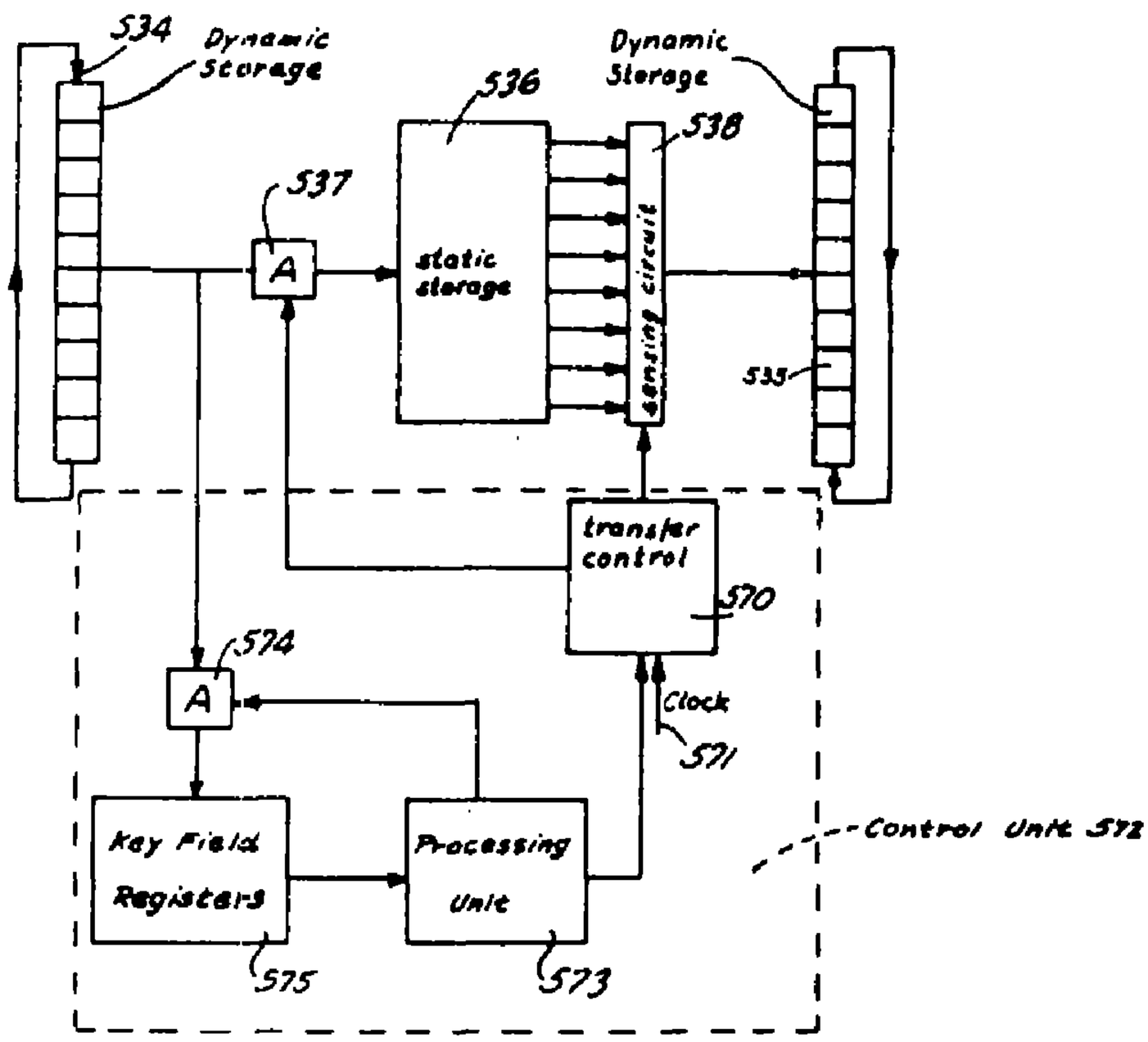

FIG. 37

INVENTOR.
GERHARD DIRKS
BY
Michael S. Striker
ATTORNEY

DATA HANDLING SYSTEM

Filed Aug. 3, 1963 183 Sheets-Sheet 34

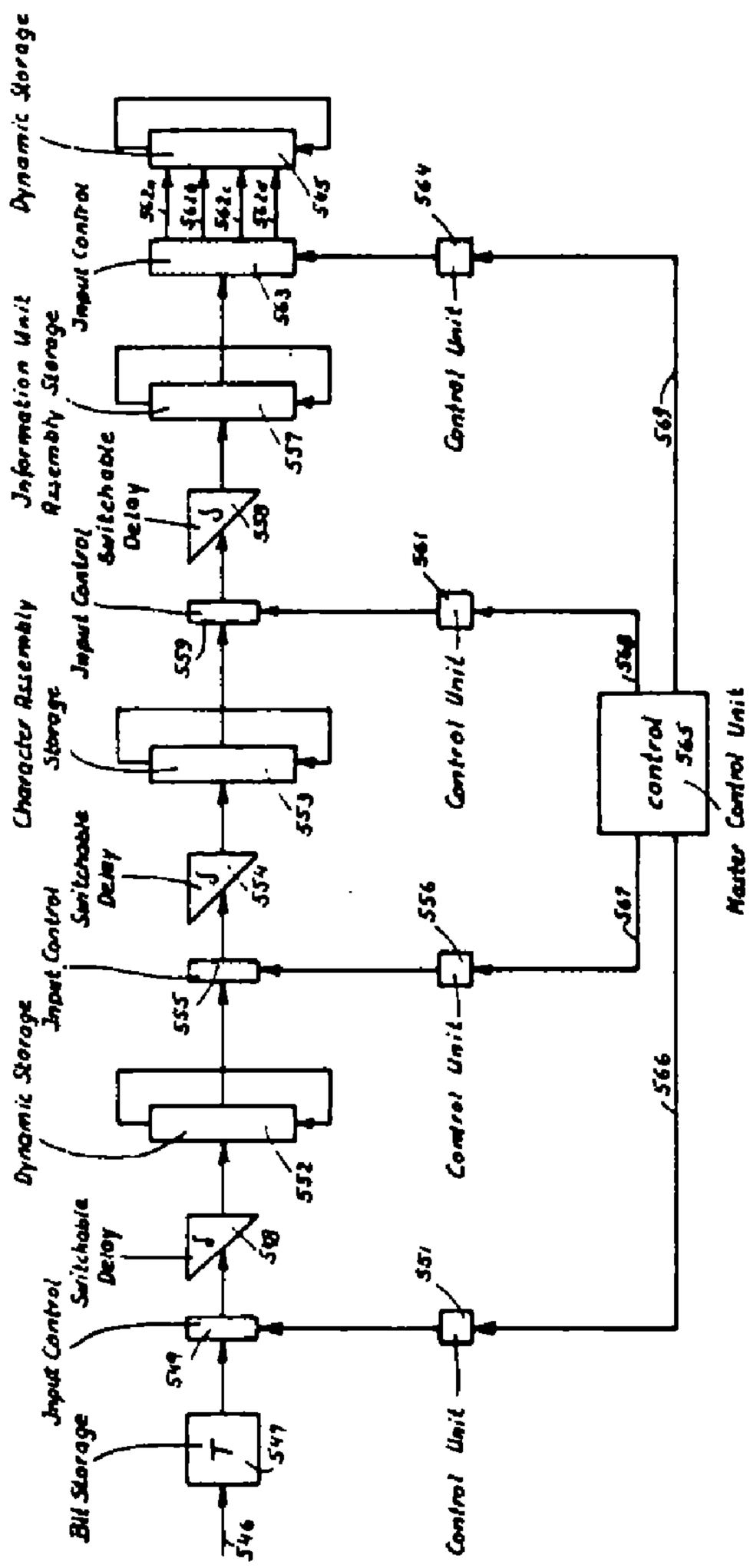

FIG. 38

INVENTOR.
GERHARD DIRKS

BY Michael S. Striker
ATTORNEY

DATA HANDLING SYSTEM

Filed Aug. 9, 1963 183 Sheets-Sheet 33

FIG. 39

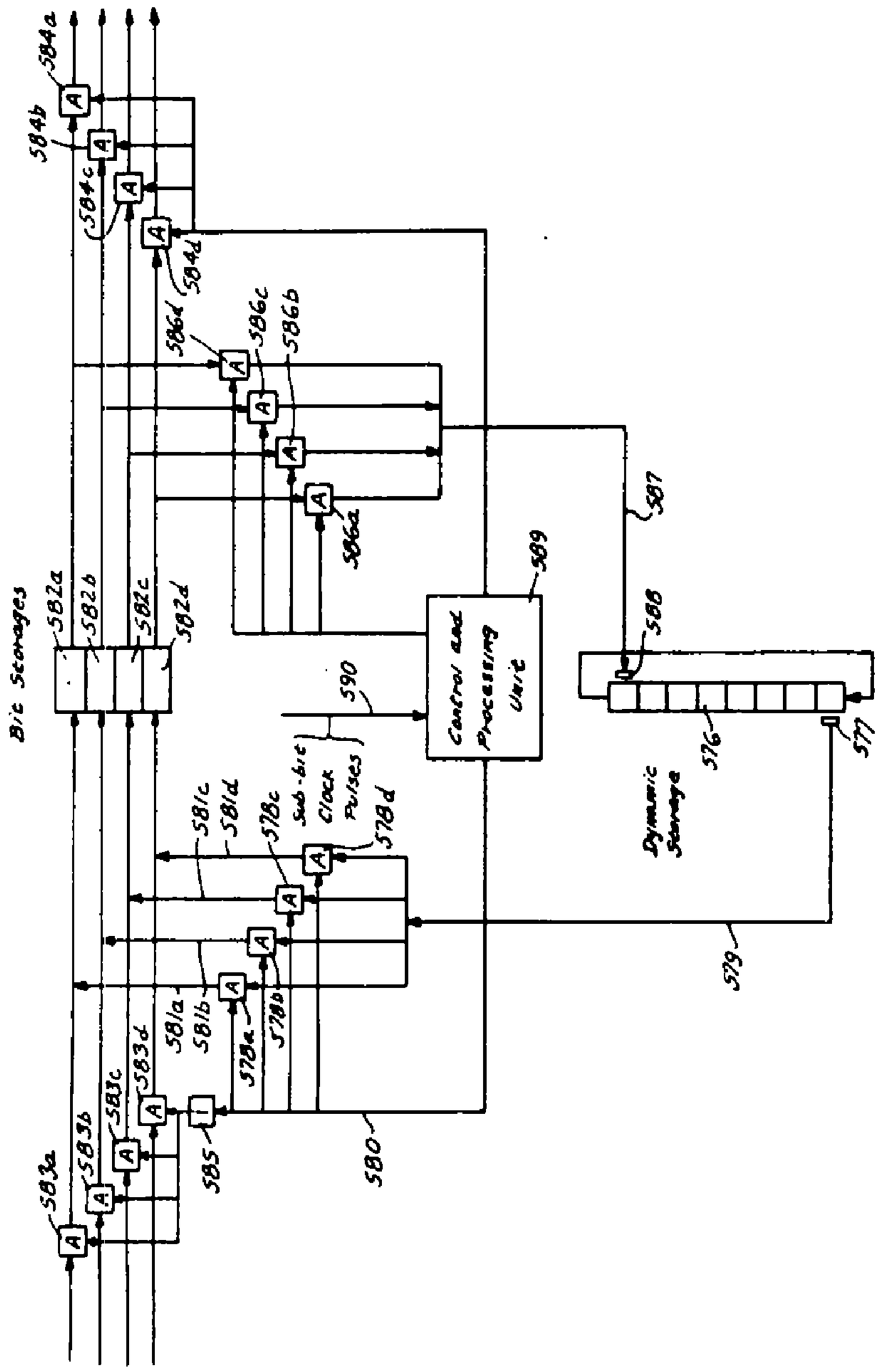

INVENTOR
GERHARD DIRKS

BY Michael S. Striker

ATTORNEY

DATA HANDLING SYSTEM

Filed Aug. 9, 1963 183 Sheets-Sheet 36

FIG. 40

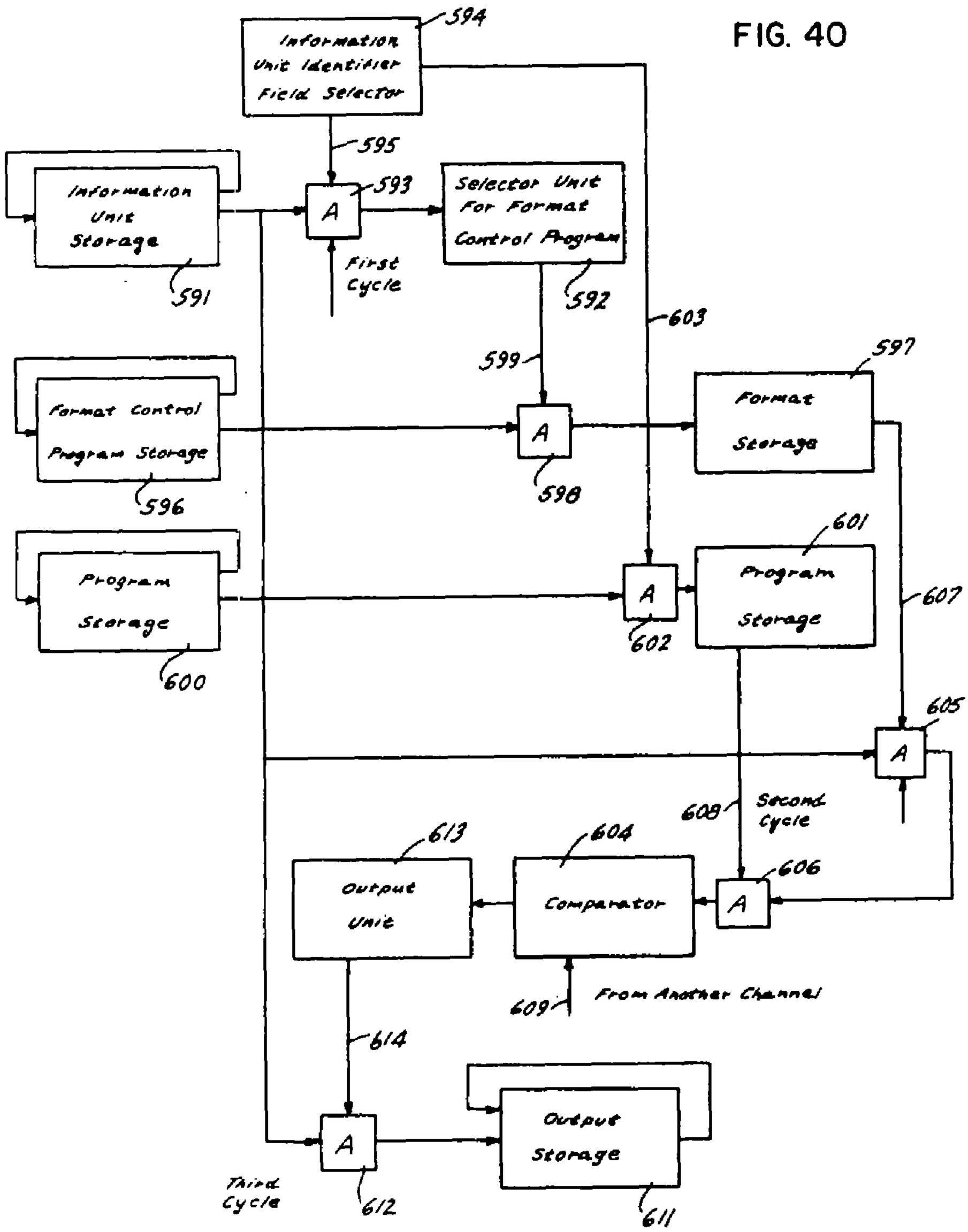

INVENTOR.
GERHARD DIRKS

BY

Michael S. Striker
ATTORNEY

FIG. 41a

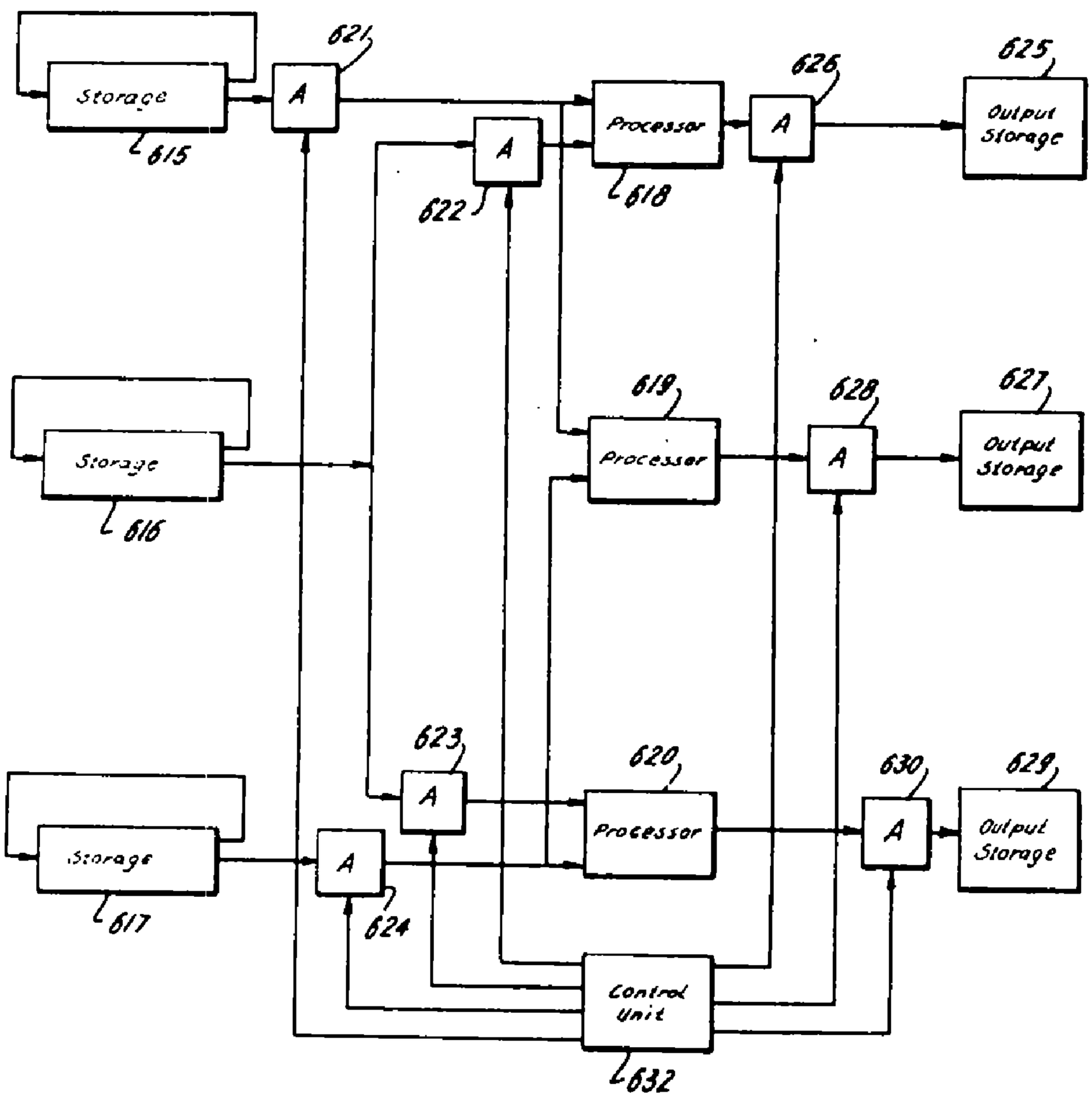

INVENTOR.
GERHARD DIRKS
BY
Michael S. Striker
ATTORNEY

FIG. 41b

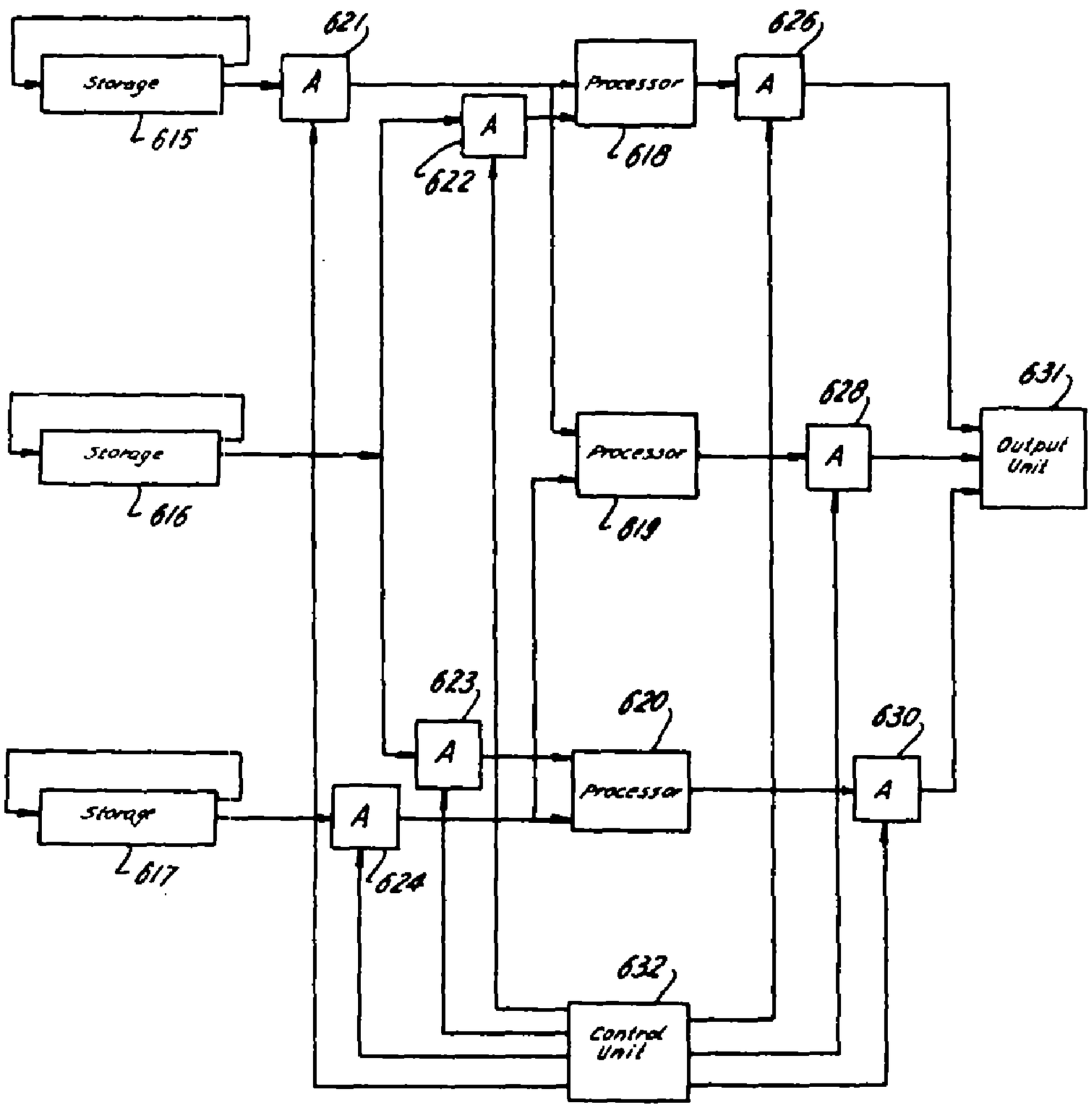

INVENTOR
GERHARD DIRKS
BY
Michael S. Striker
ATTORNEY

FIG. 42

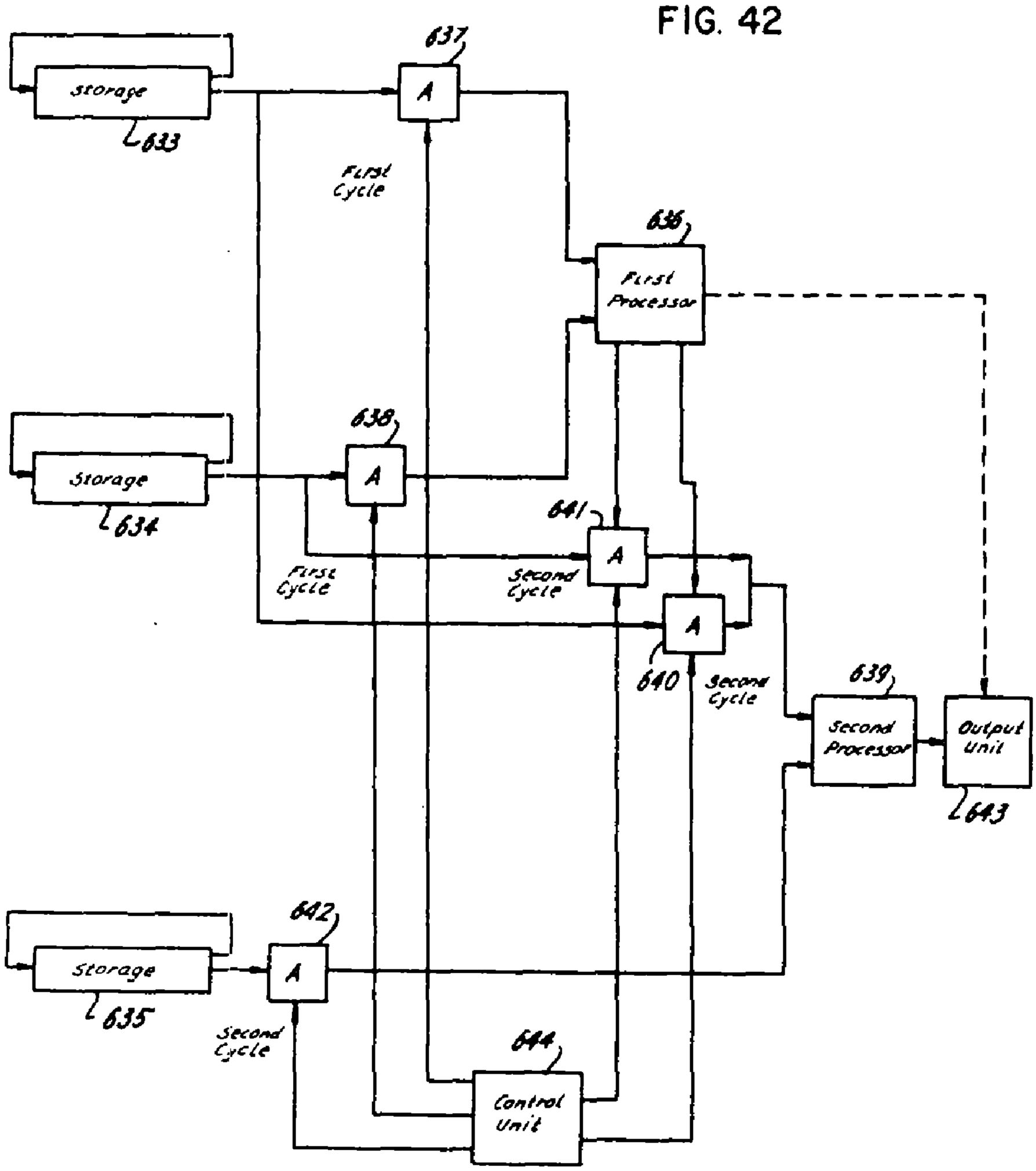

INVENTOR.
GERHARD DIRKS

BY

Michael S. Striker

ATTORNEY

FIG. 43

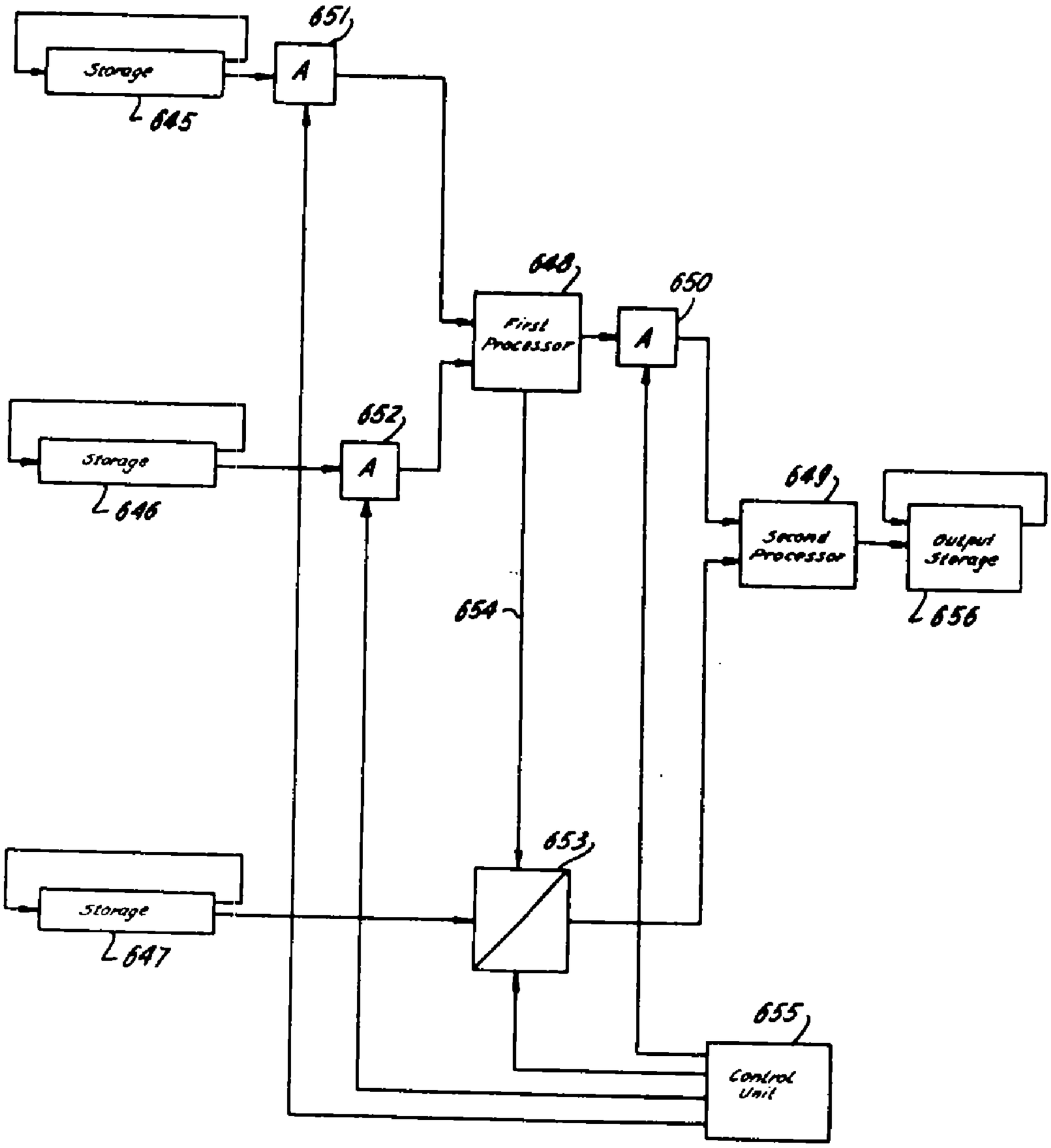

INVENTOR
GERHARD DIRKS
BY
Michael S. Striker
ATTORNEY

FIG. 44a

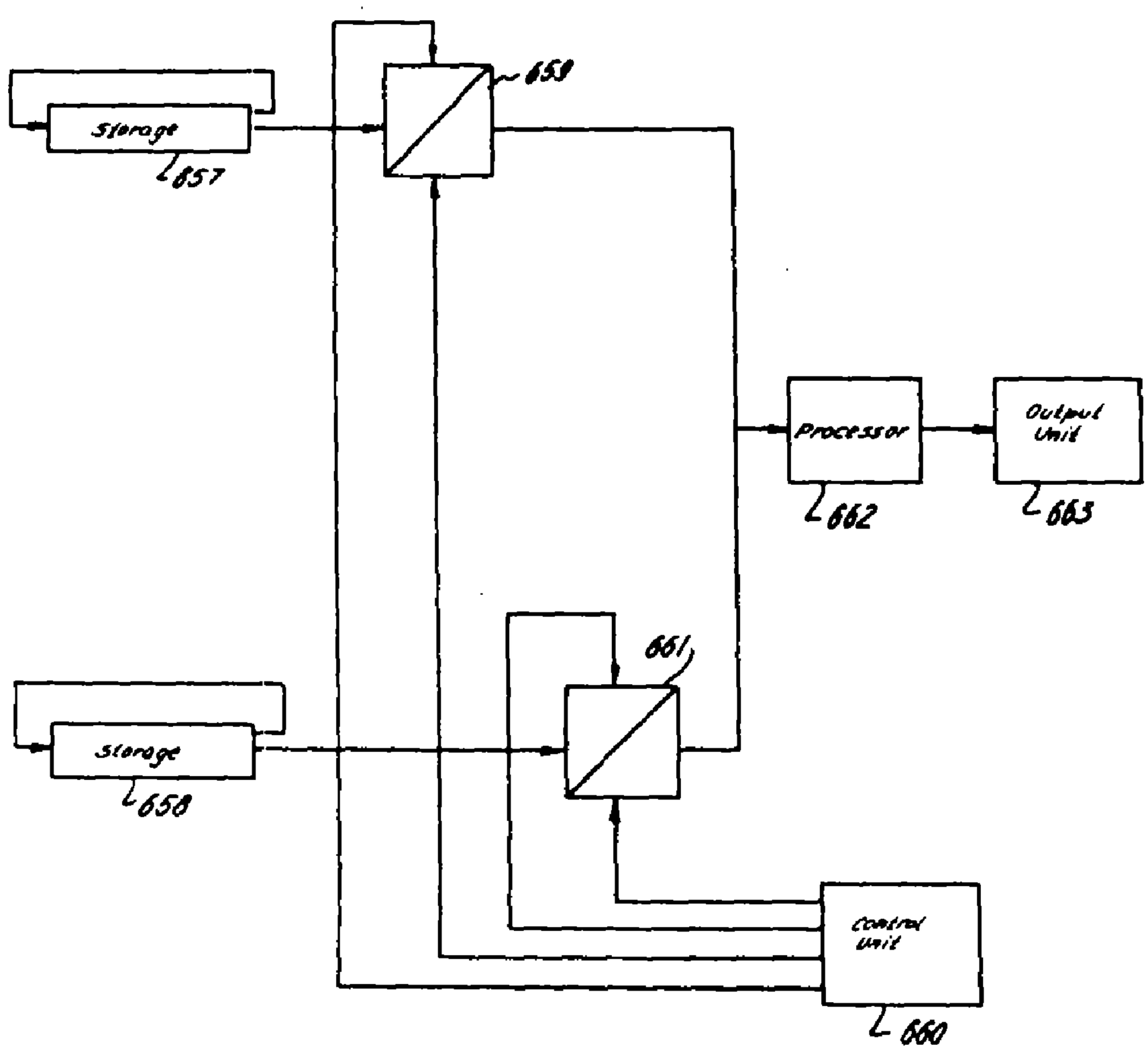

INVENTOR.
GERHARD DIRKS
BY
Michael S. Striker
ATTORNEY

DATA HANDLING SYSTEM

Filed Aug. 9, 1963 183 Sheets-Sheet 42

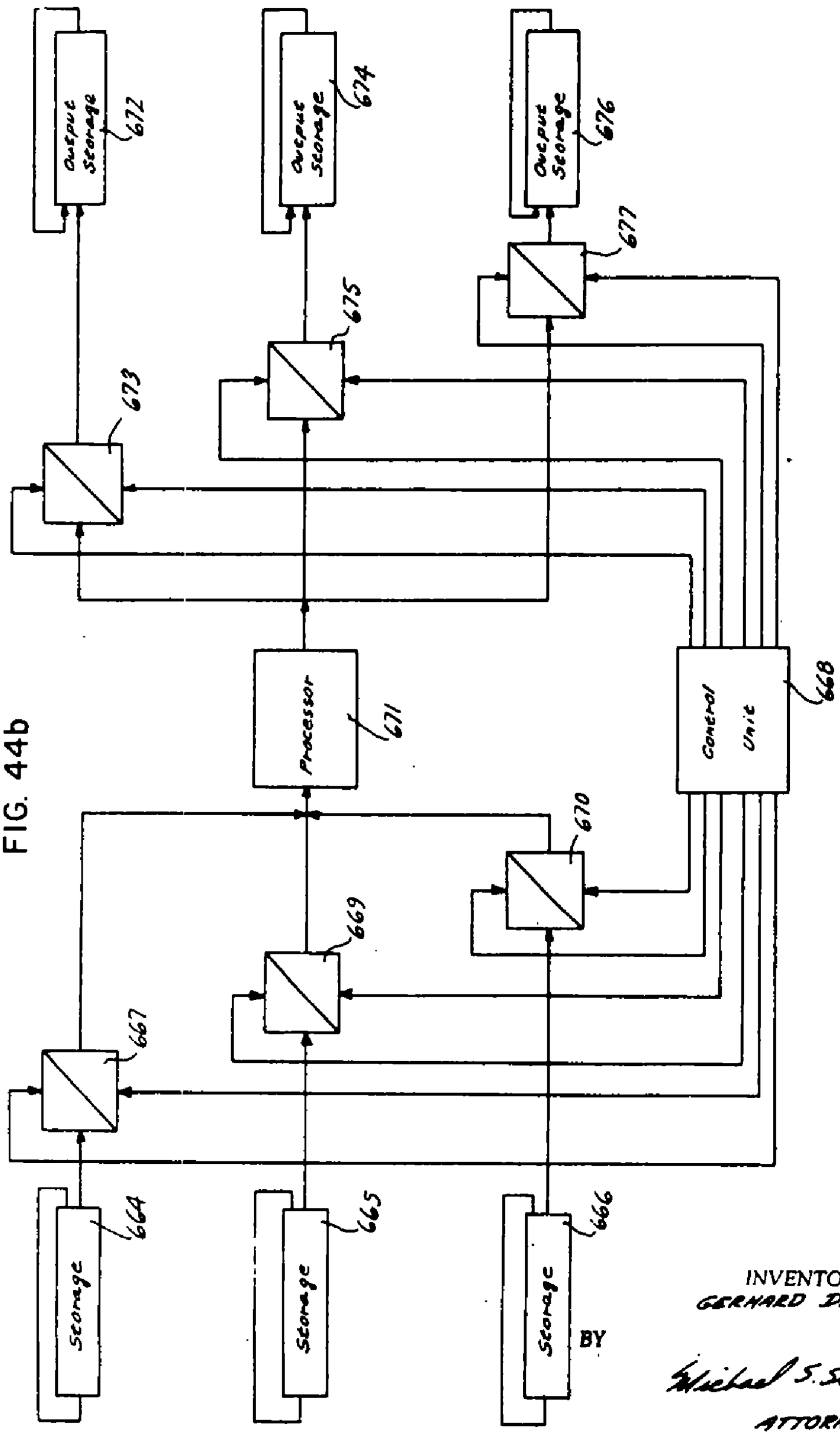

FIG. 44b

INVENTOR.
GERHARD DIRKS

BY

Michael S. Striker

ATTORNEY

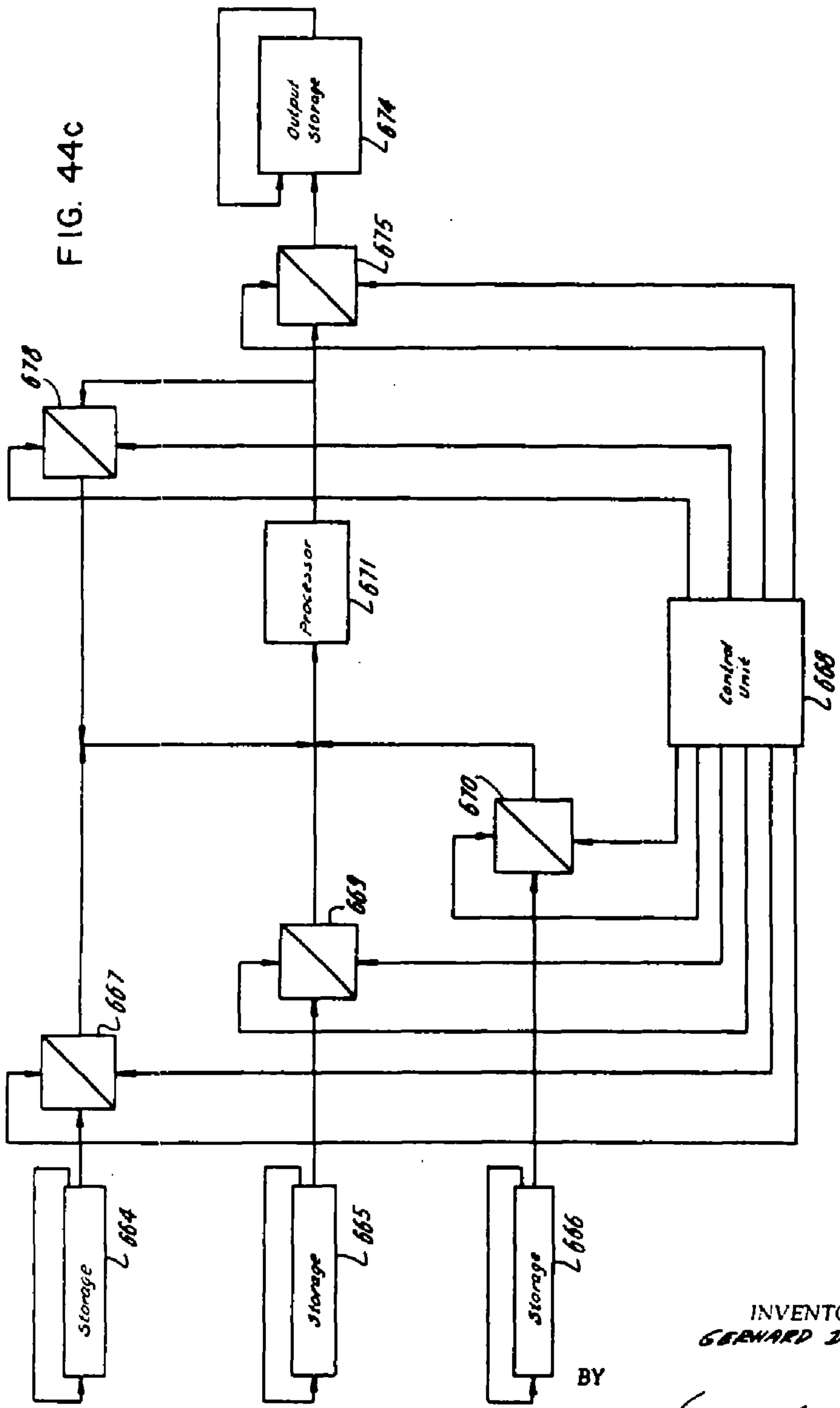

FIG. 44c

INVENTOR.
GERHARD DIRKS
BY
Michael S. Striker
ATTORNEY

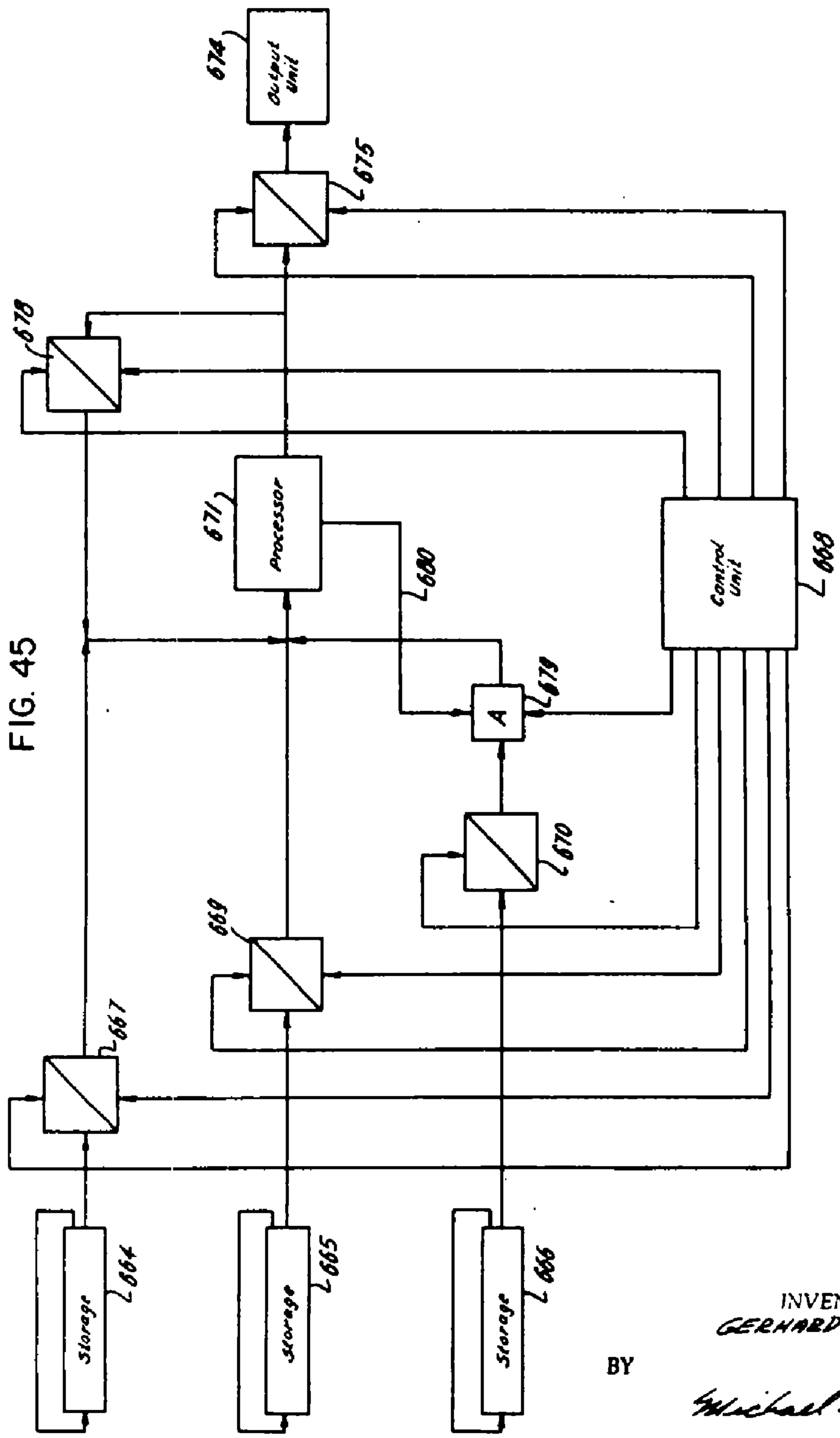

FIG. 45

INVENTOR
GERHARD DIRKS
BY
Michael S. Striker
ATTORNEY

FIG. 46

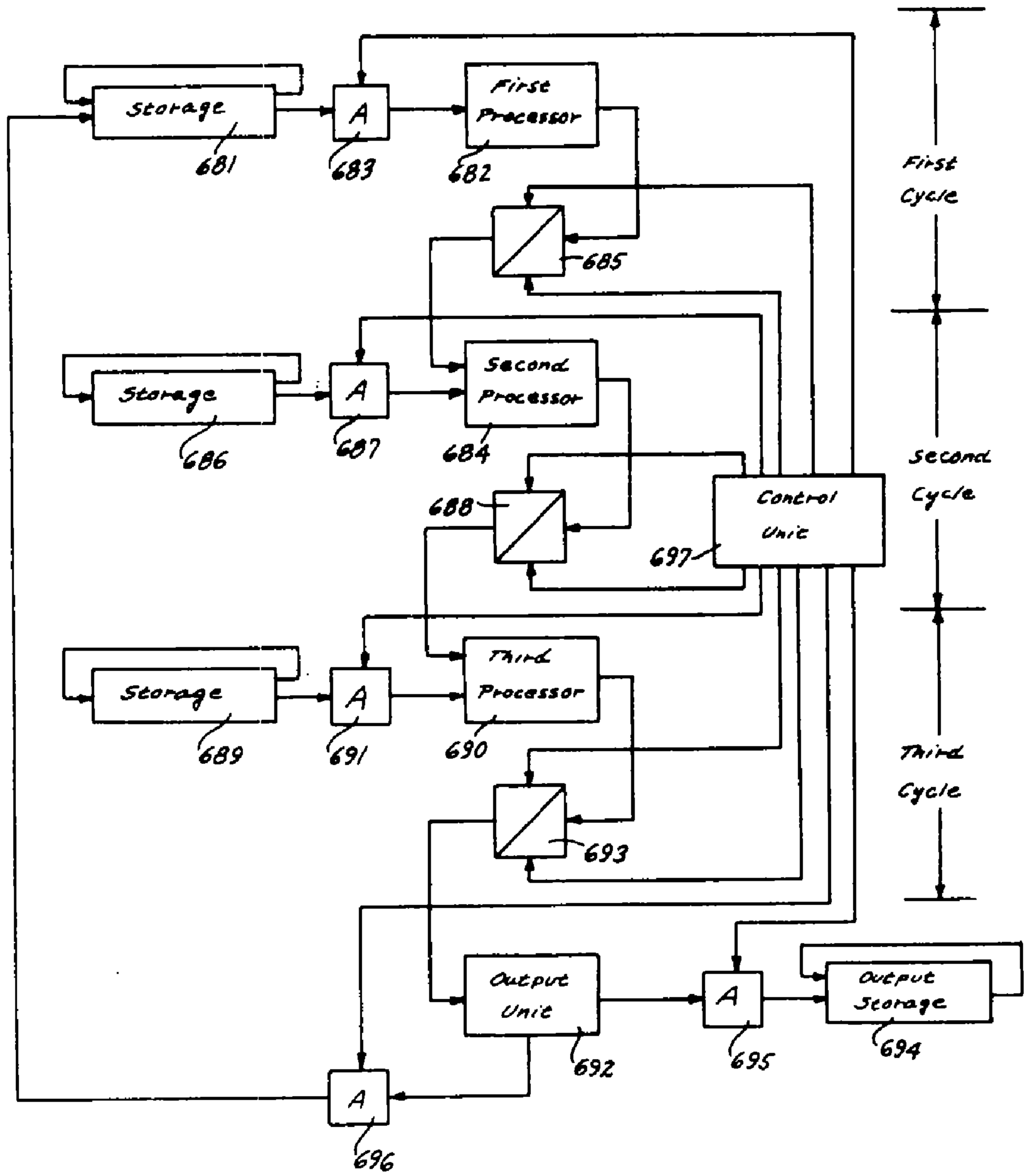

INVENTOR
GERHARD DIRK
BY
Michael S. Striker
ATTORNEY

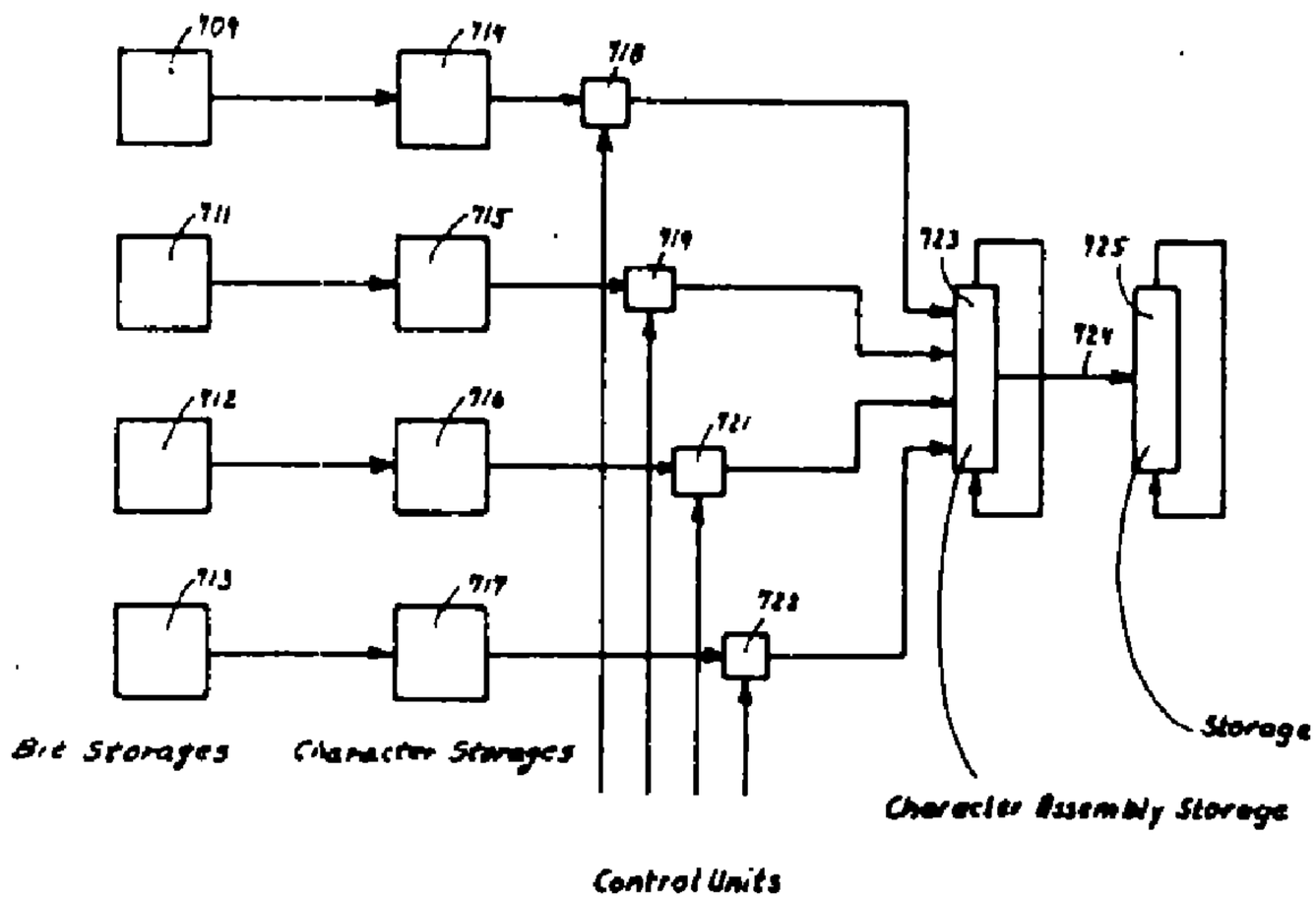

FIG. 47

INVENTOR.
GERHARD DIRKS
BY
Michael S. Striker
ATTORNEY

DATA HANDLING SYSTEM

Filed Aug. 9, 1963 183 Sheets-Sheet 47

FIG. 48

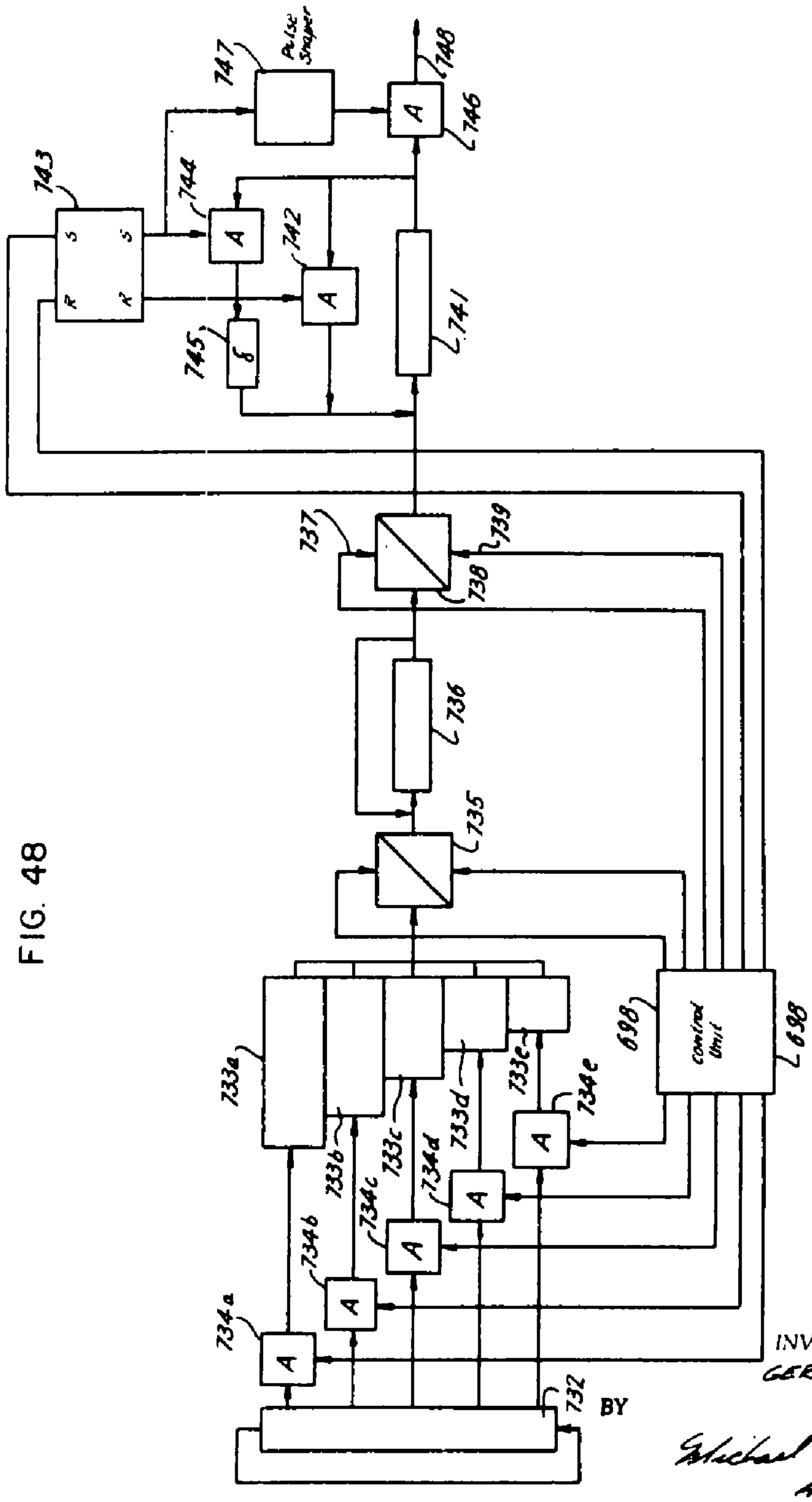

INVENTOR
GERHARD DIRKS
BY
Michael S. Striker
ATTORNEY

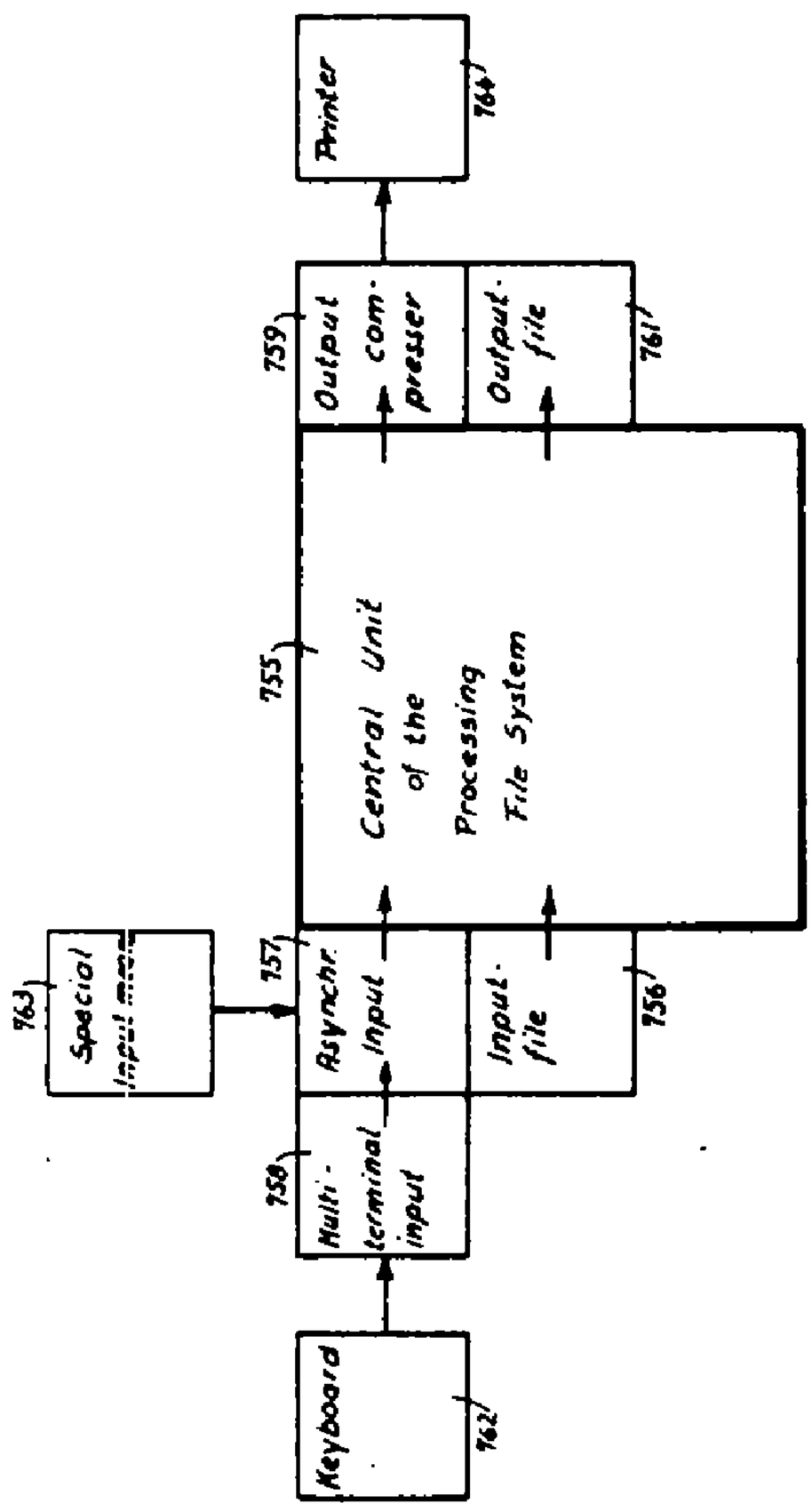

FIG. 49

INVENTOR.
GERHARD DIRKS

BY Michael S. Striker
ATTORNEY

DATA HANDLING SYSTEM

Filed Aug. 9, 1963 163 Sheets-Sheet 49

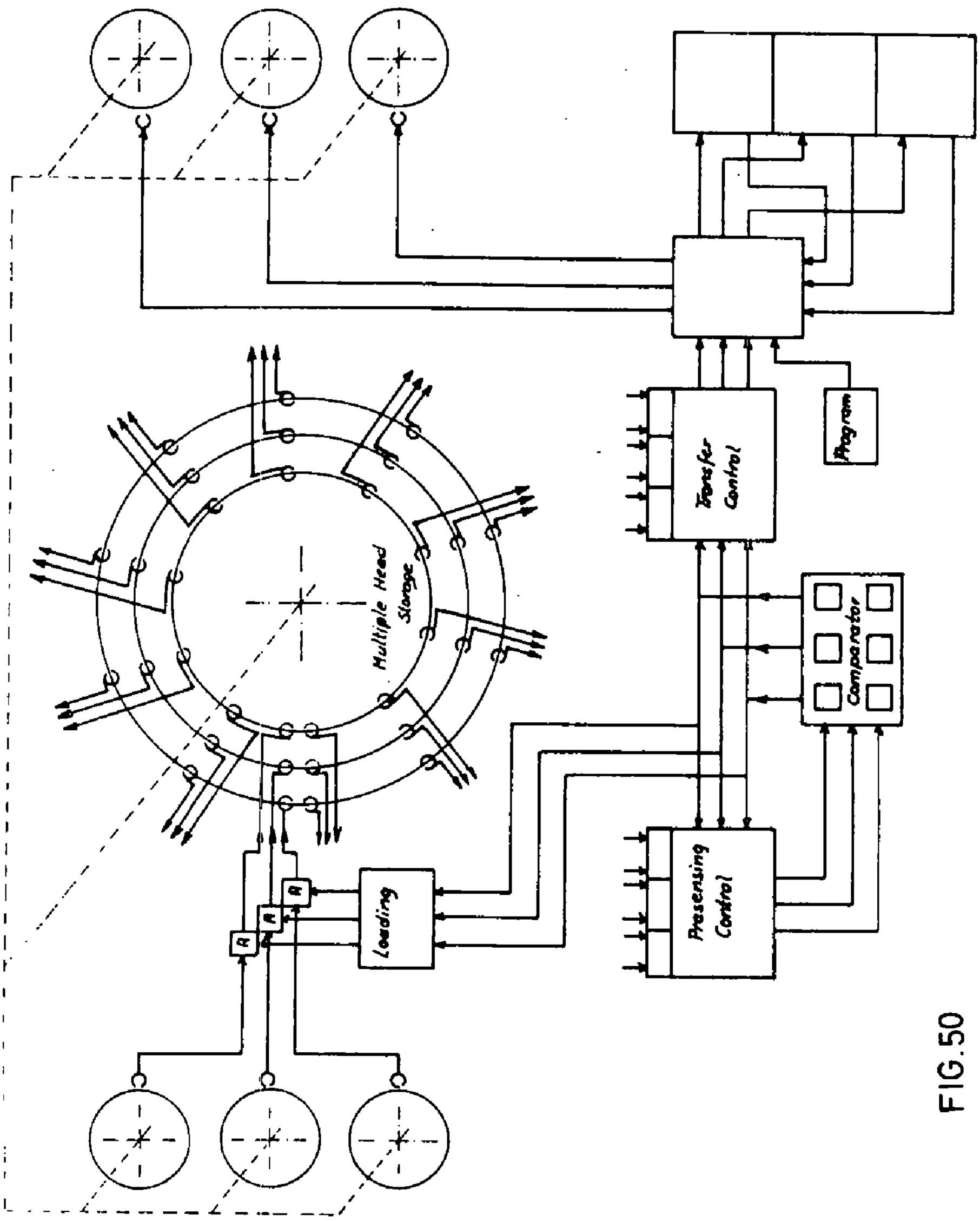

FIG. 50

INVENTOR.
GERHARD DIRKS
BY
Michael S Striker
ATTORNEY

DATA HANDLING SYSTEM

Filed Aug. 9, 1963 183 Sheets-Sheet 50

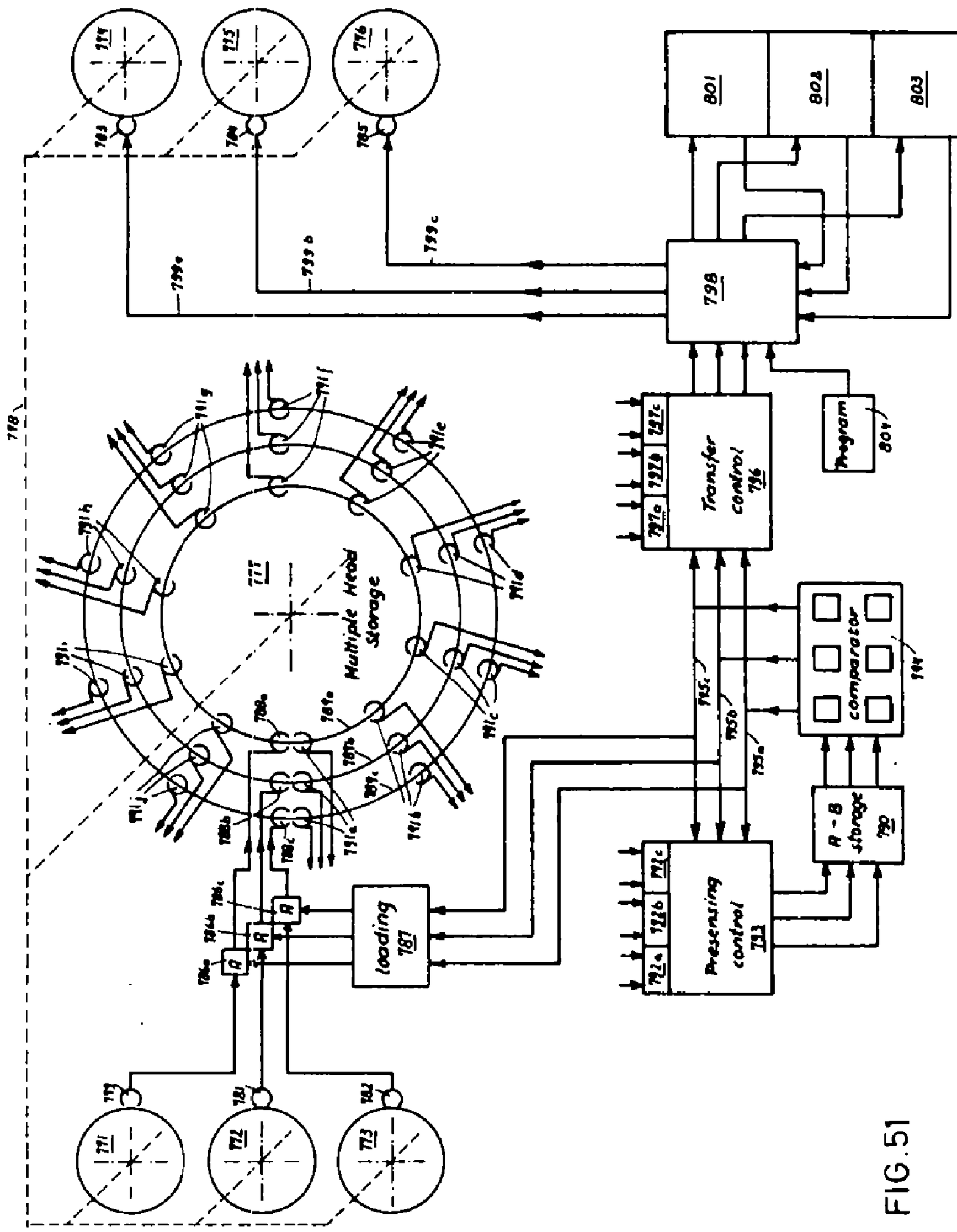

FIG. 51

INVENTOR.
GERHARD DIRKS
BY
Michael S. Striker
ATTORNEY

DATA HANDLING SYSTEM

Filed Aug. 9, 1963 183 Sheets-Sheet 61

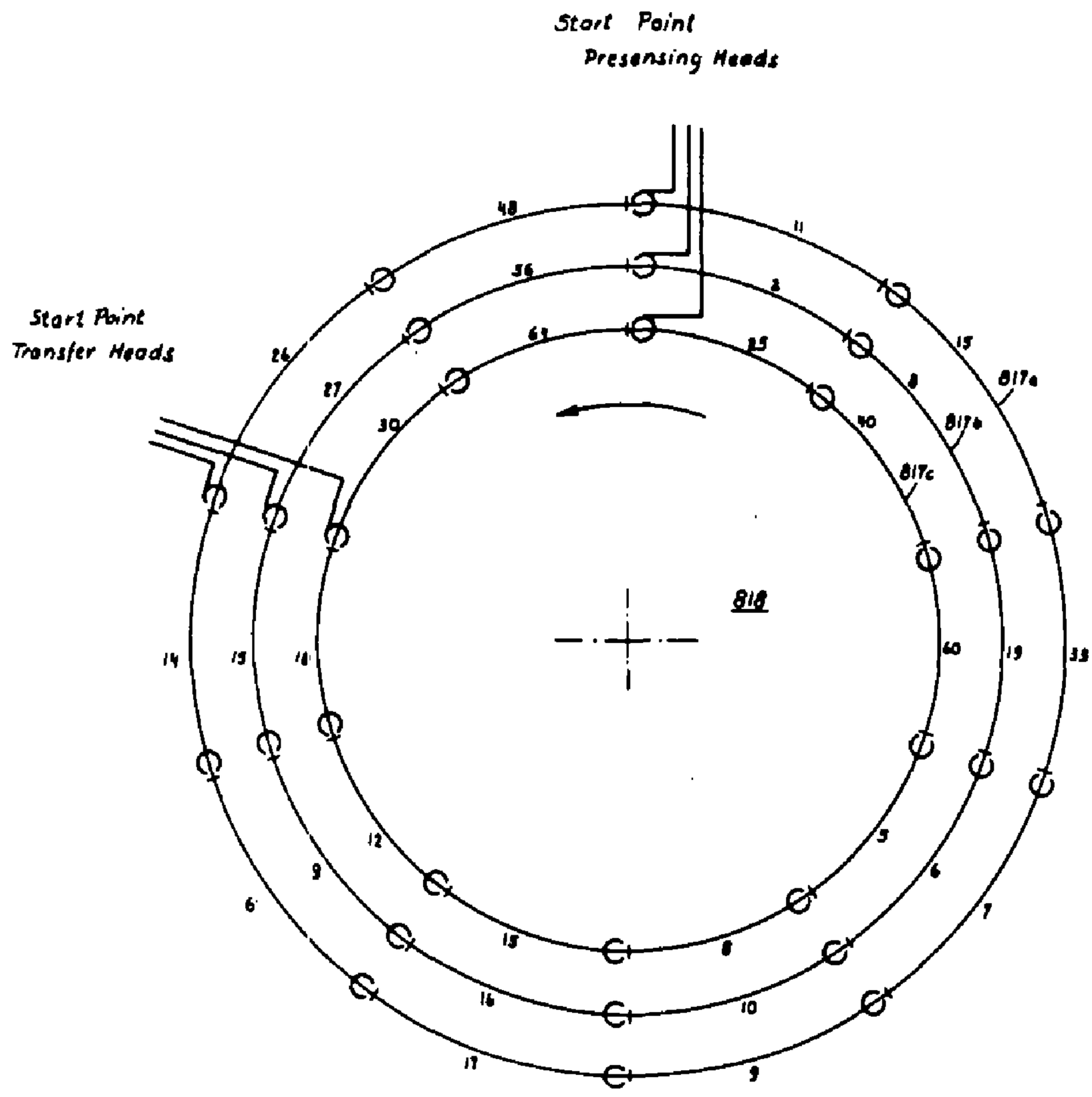

FIG. 52

INVENTOR
GERHARD DIRKS

BY Michael S. Striker
ATTORNEY

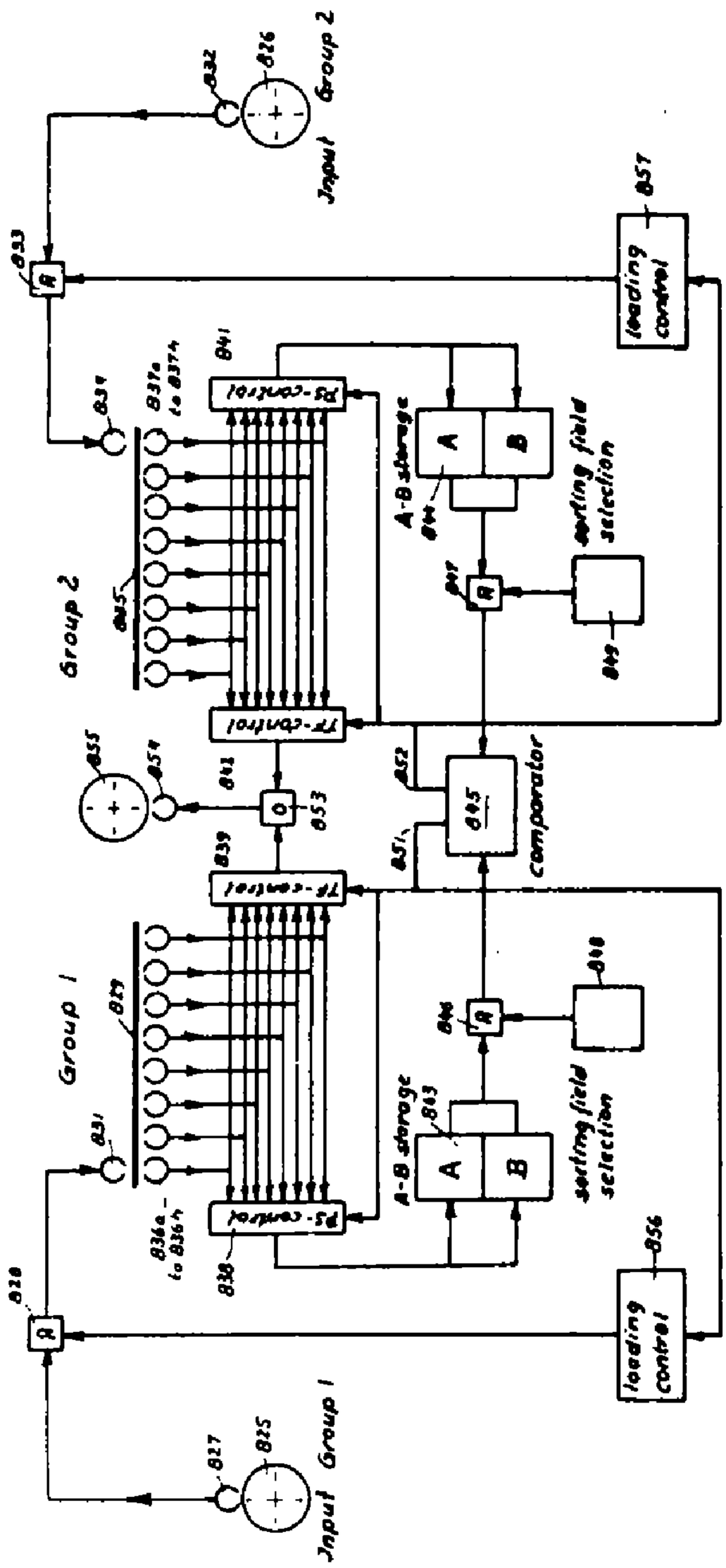

FIG.53

INVENTOR.
GERHARD DIRKS

BY

Michael S. Striker
ATTORNEY

DATA HANDLING SYSTEM

Filed Aug. 9, 1963 183 Sheets-Sheet 53

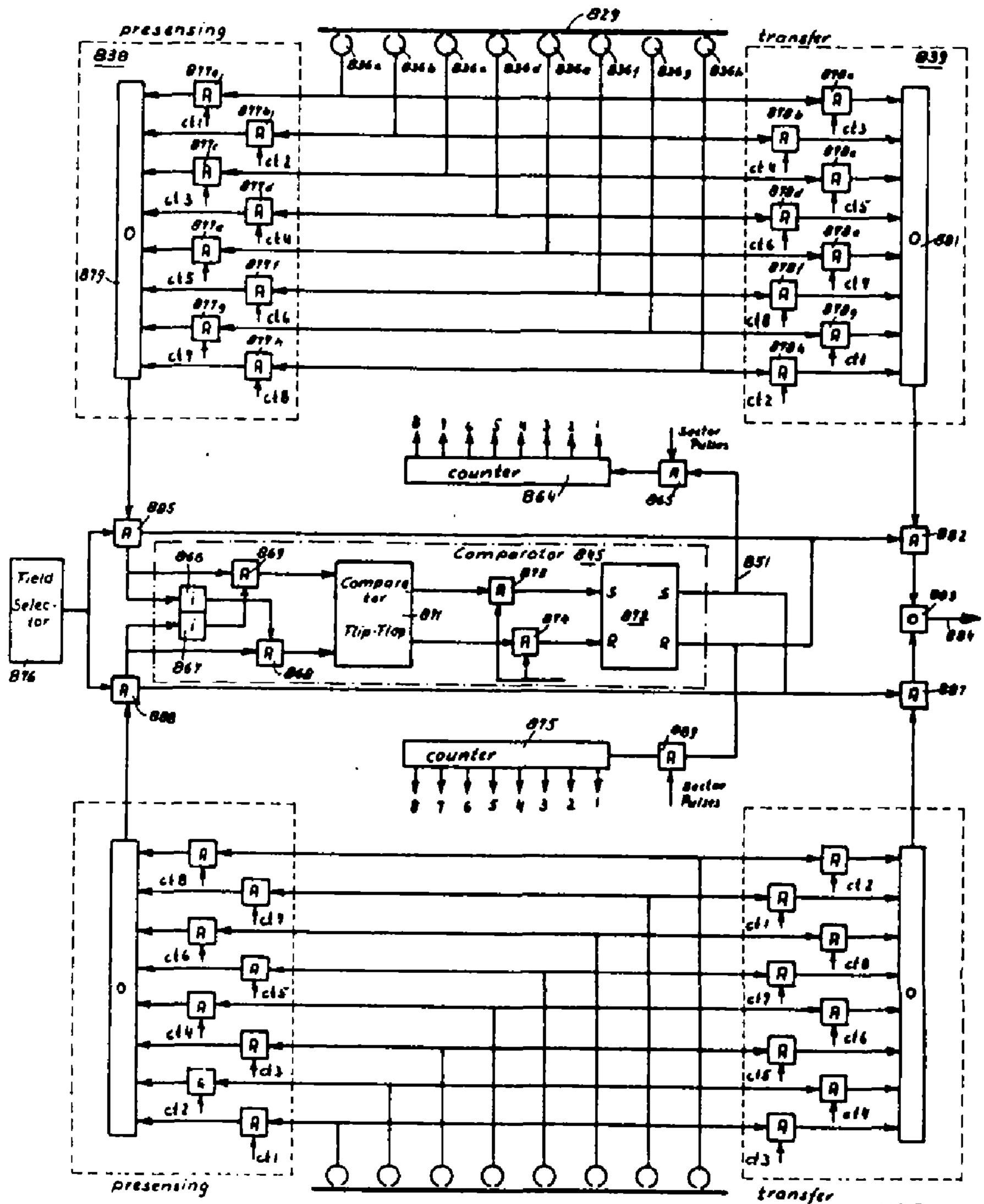

FIG.54

INVENTOR
GERHARD DIRKS
BY
Michael S. Striker
ATTORNEY

DATA HANDLING SYSTEM

Filed Aug. 9, 1963 183 Sheets-Sheet 84

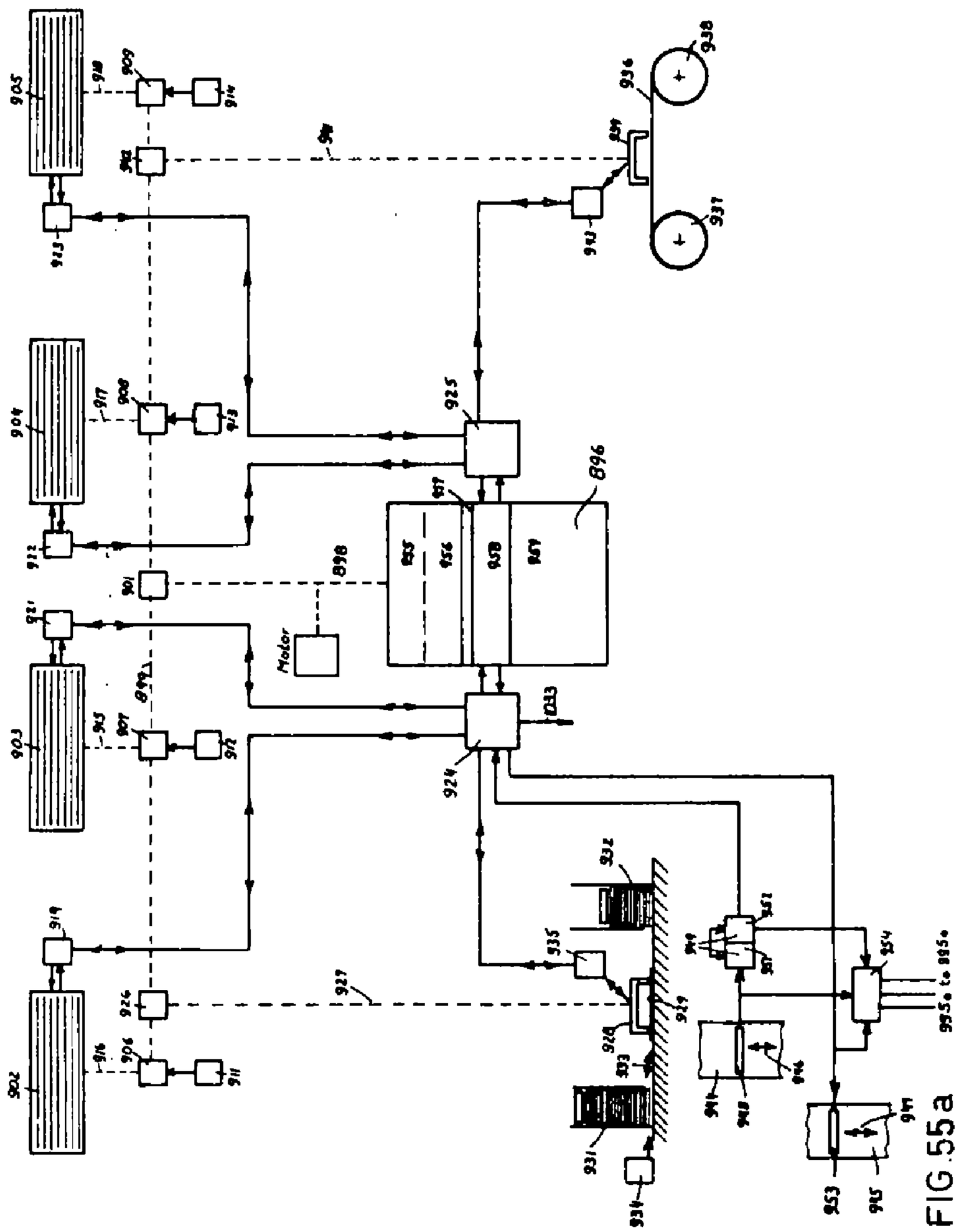

FIG. 55a

INVENTOR.
GERHARD DIRKS
BY
Michael S. Striker
ATTORNEY

DATA HANDLING SYSTEM

Filed Aug. 9, 1963 183 Sheets-Sheet 55

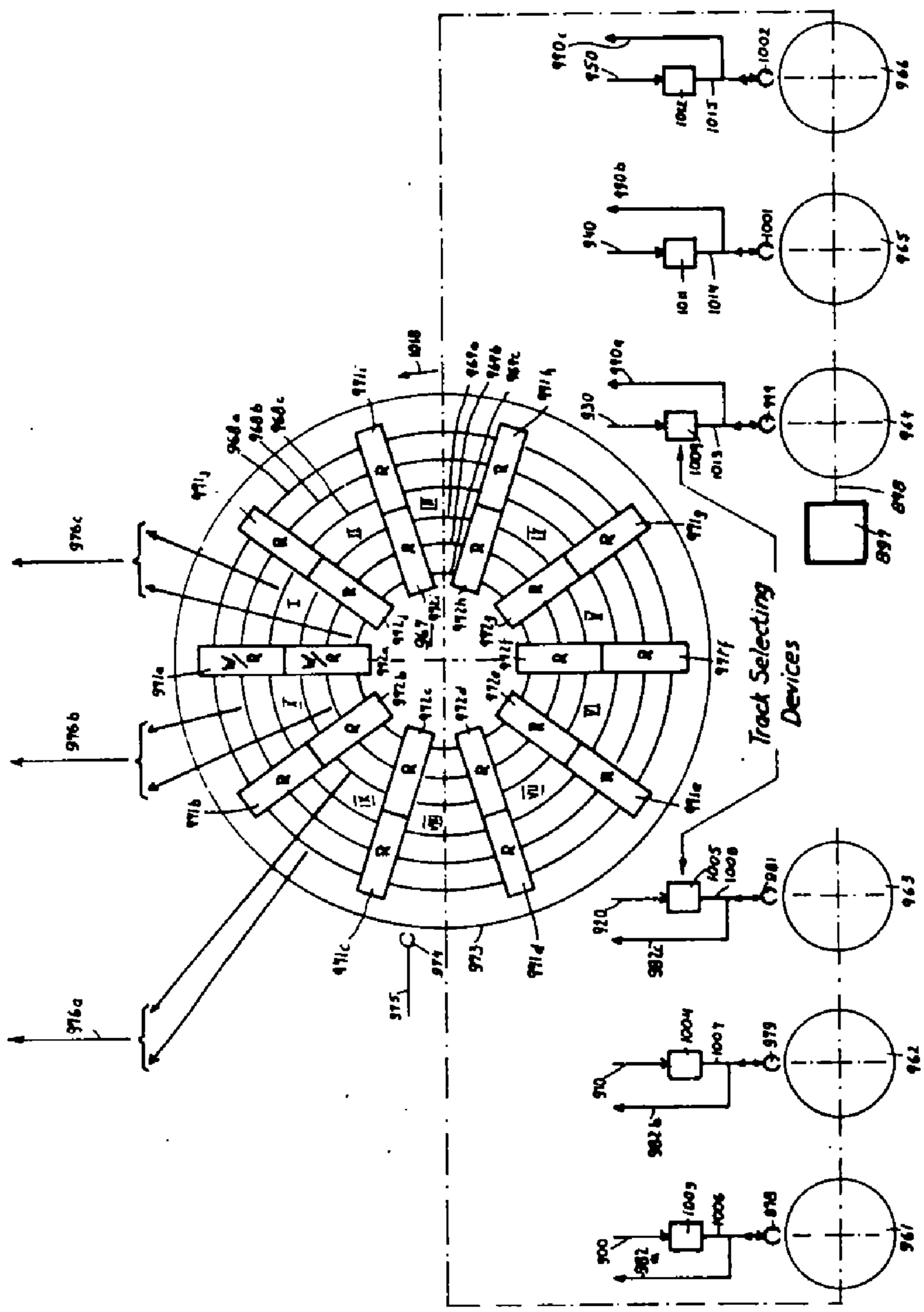

FIG. 55b

INVENTOR
GERHARD DIRKS

BY

Michael S. Striker
ATTORNEY

DATA HANDLING SYSTEM

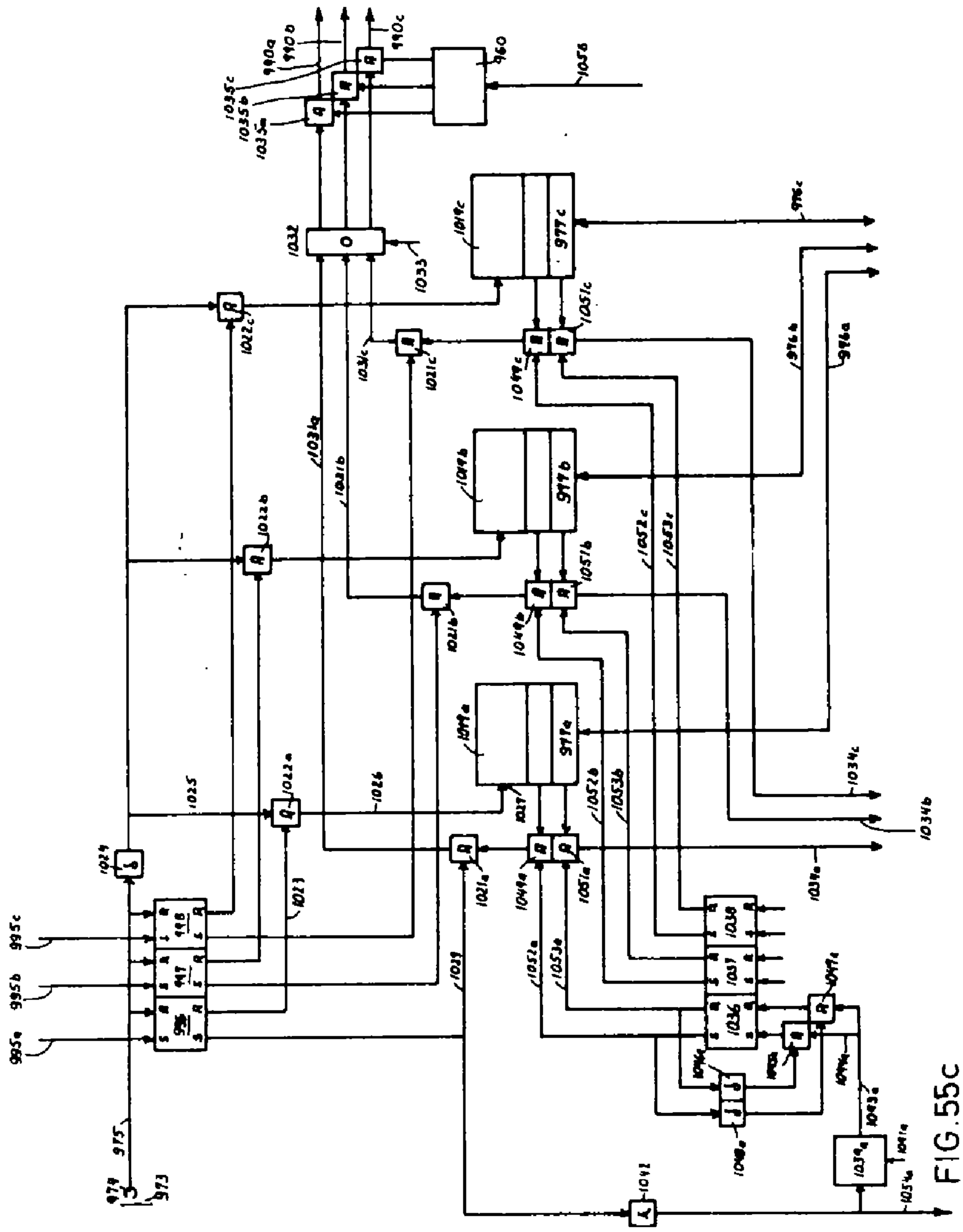

FIG. 55c

INVENTOR.
GERHARD DIRKS

BY Michael S. Striker
ATTORNEY

DATA HANDLING SYSTEM

Filed Aug. 9, 1963 183 Sheets-Sheet 57

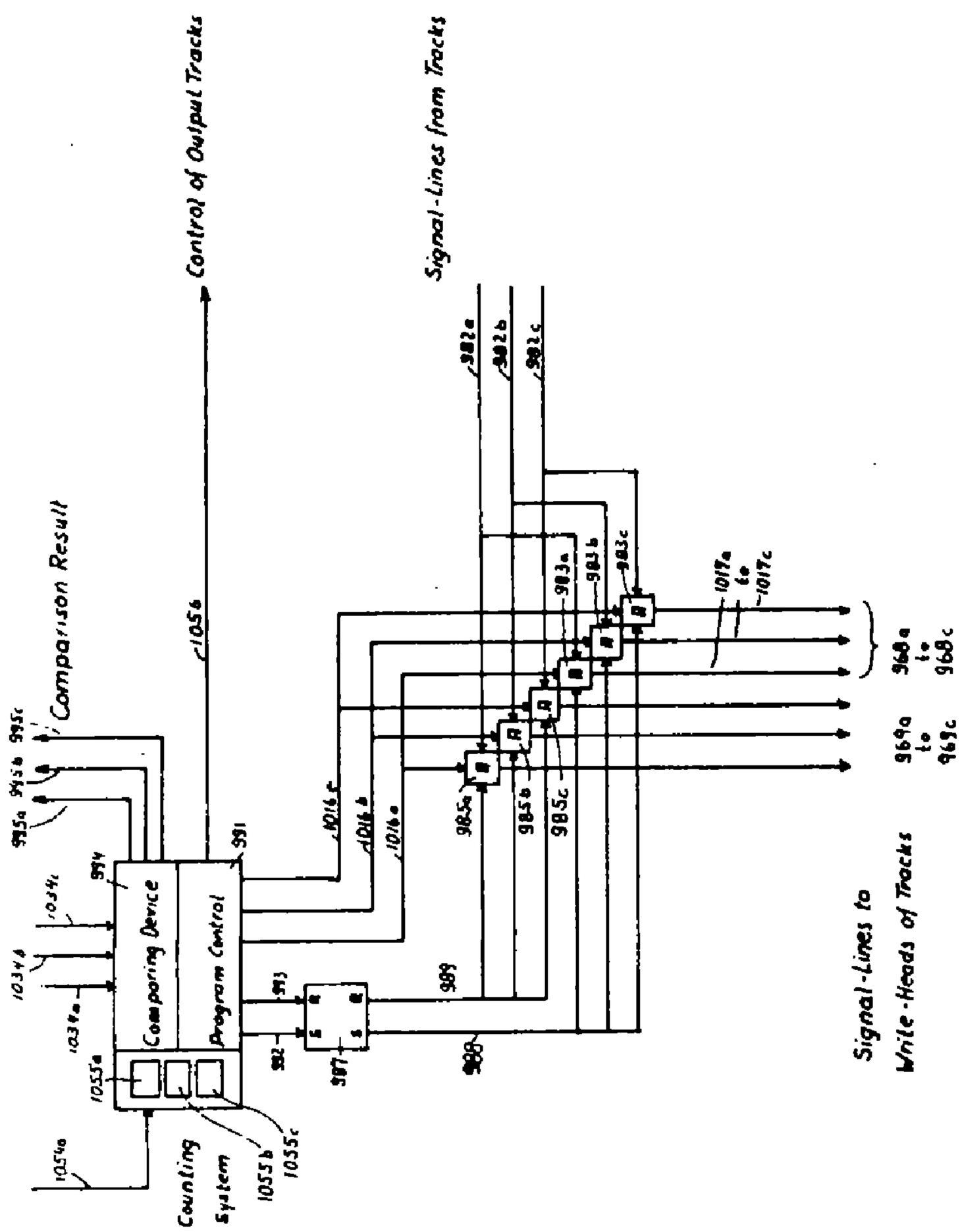

FIG. 55d

INVENTOR.
GERHARD DIRKS
BY
Michael S. Striker
ATTORNEY

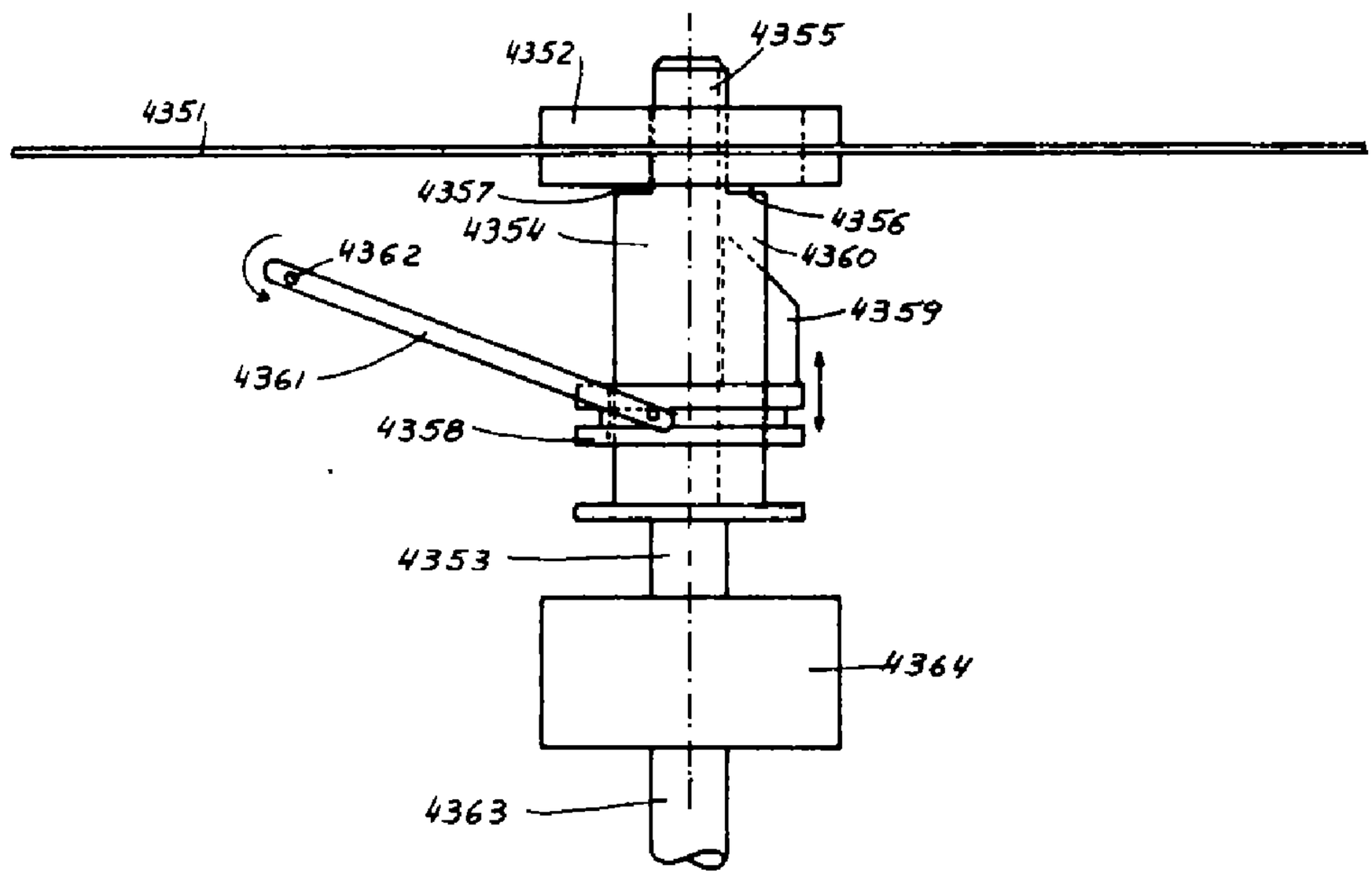

FIG.55e

INVENTOR.
GERHARD DIRKS
BY
Michael S. Striker
ATTORNEY

DATA HANDLING SYSTEM

Filed Aug. 9, 1963 183 Sheets-Sheet 59

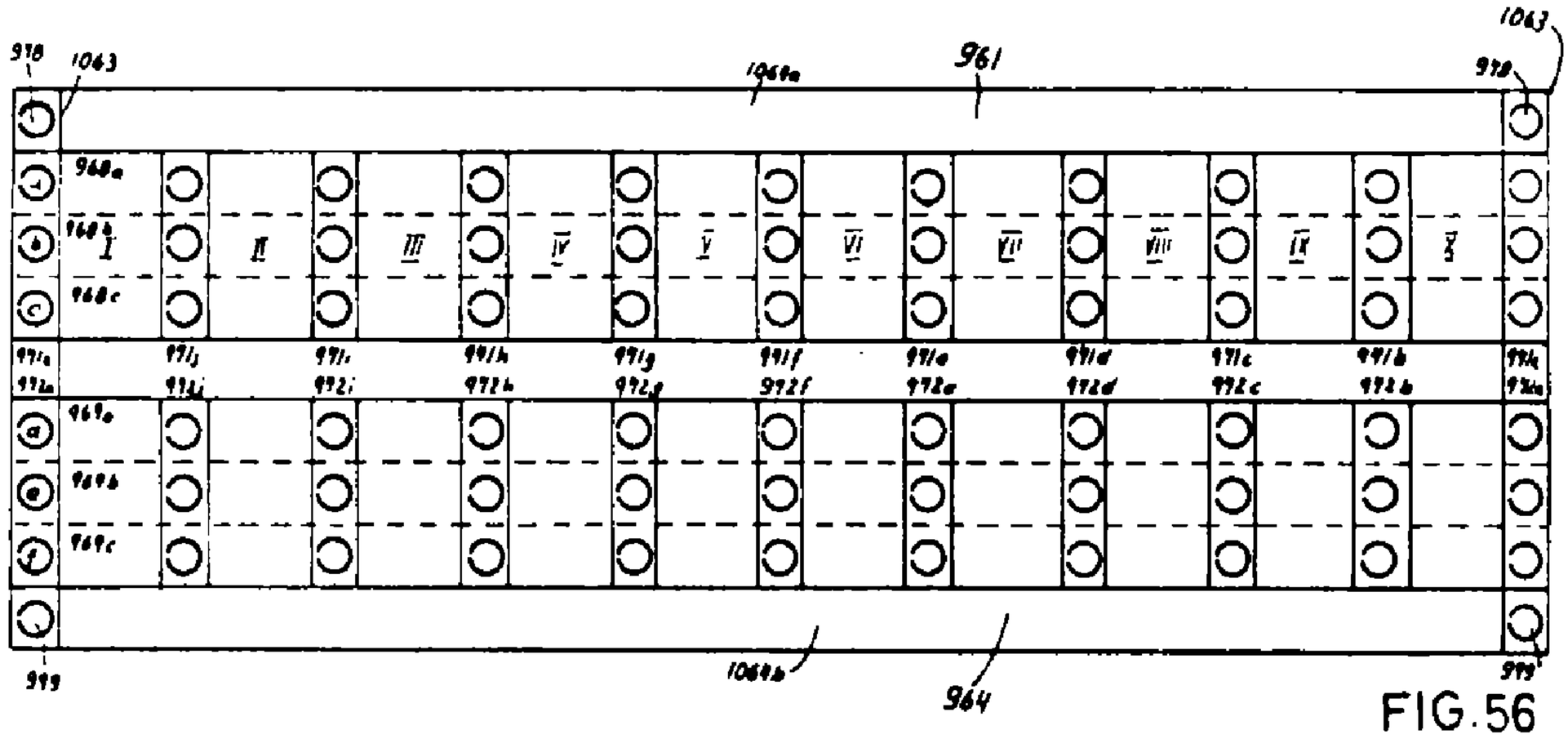

FIG. 56

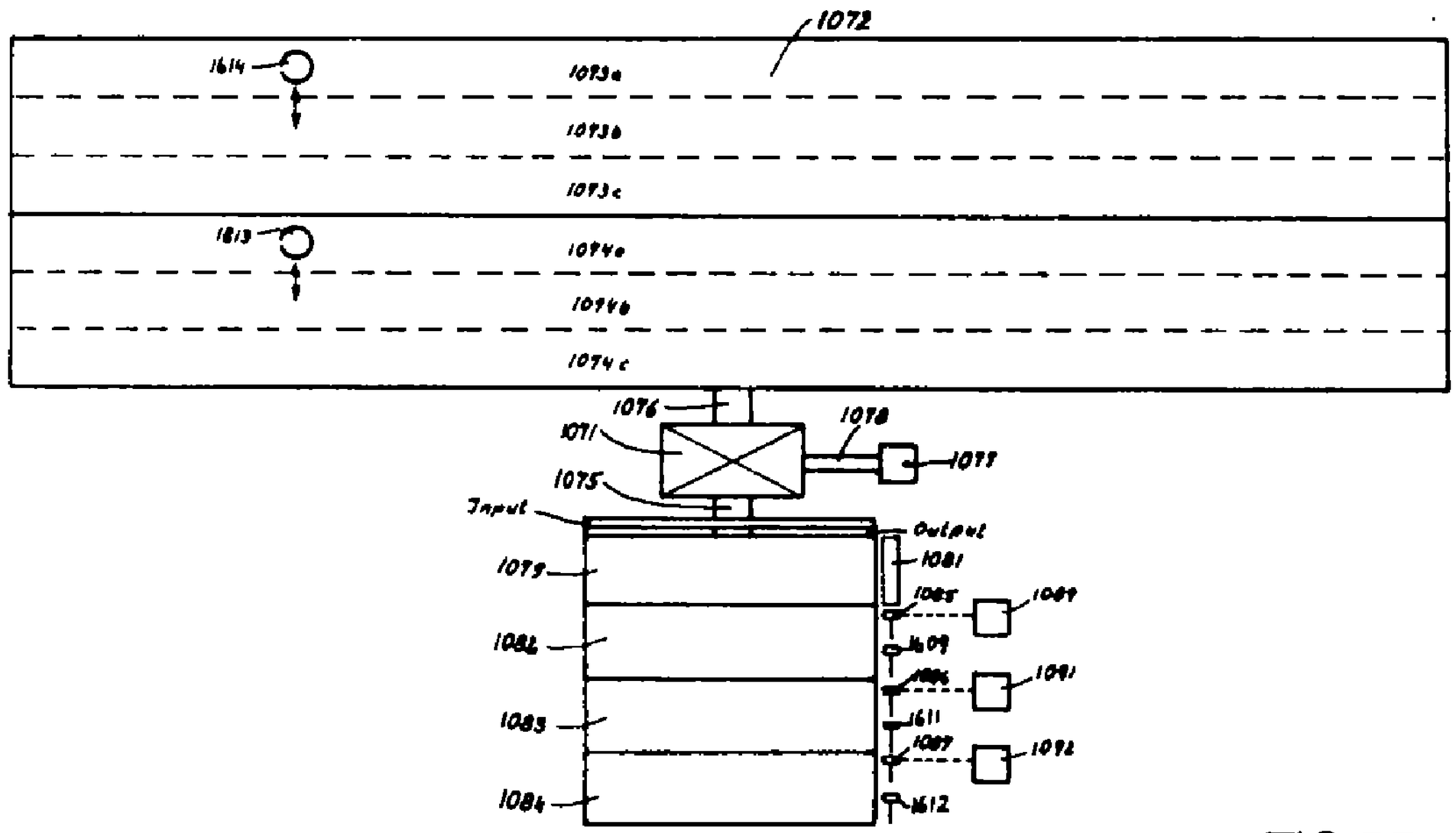

FIG. 57

INVENTOR.
GERHARD DIRKS

BY

Michael S. Striker
ATTORNEY

DATA HANDLING SYSTEM

Filed Aug. 9, 1963 183 Sheets-Sheet 60

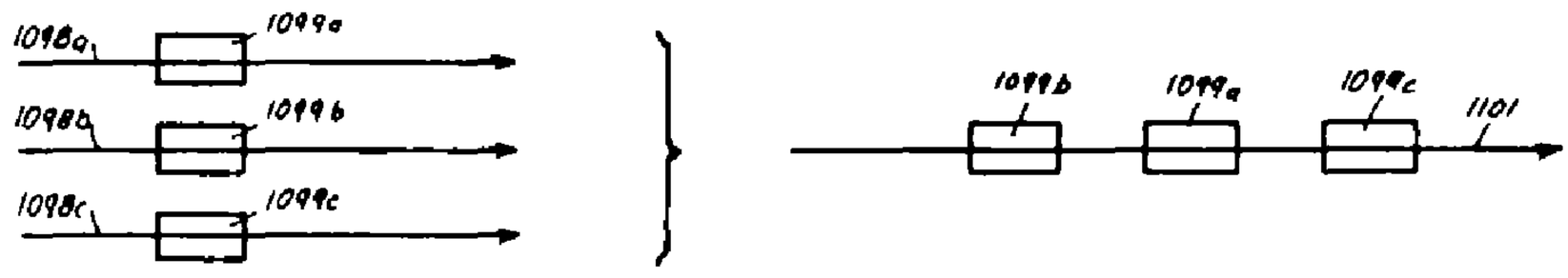

FIG.58

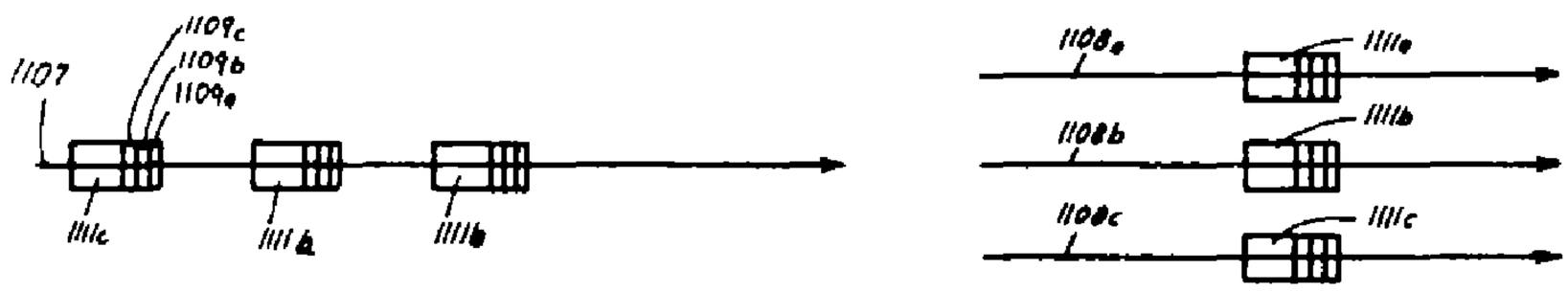

FIG.59

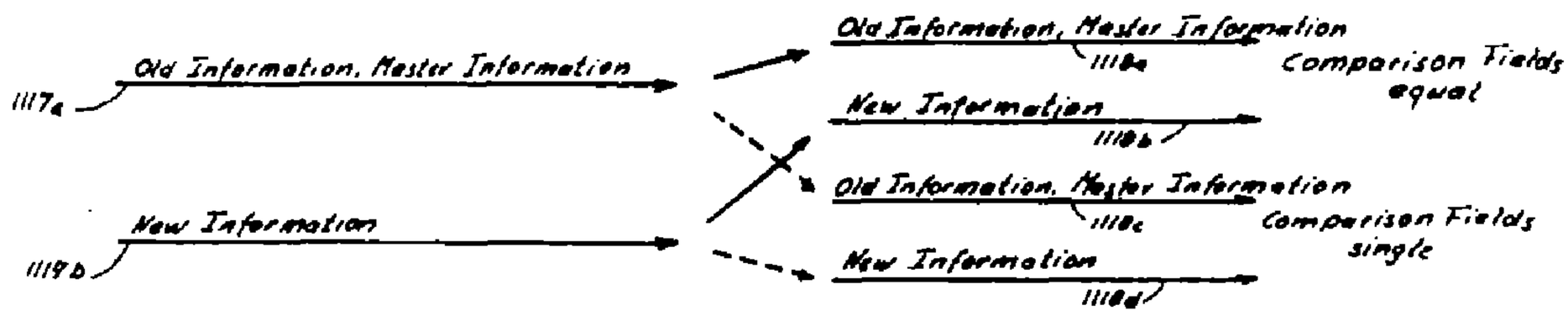

FIG.60

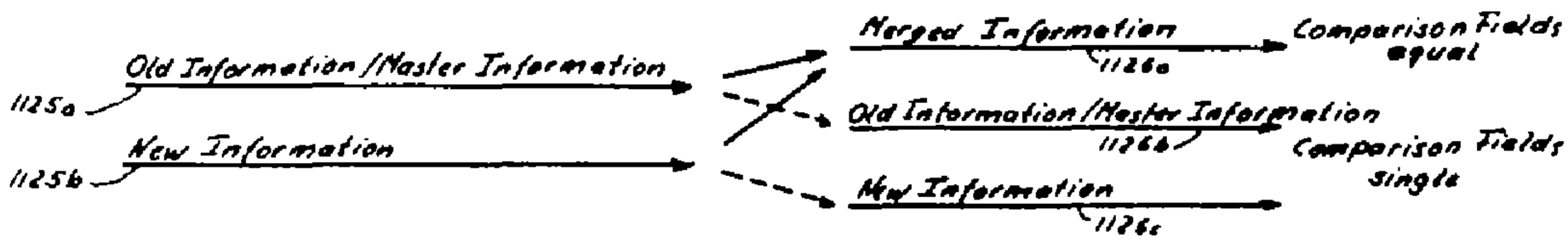

FIG. 61

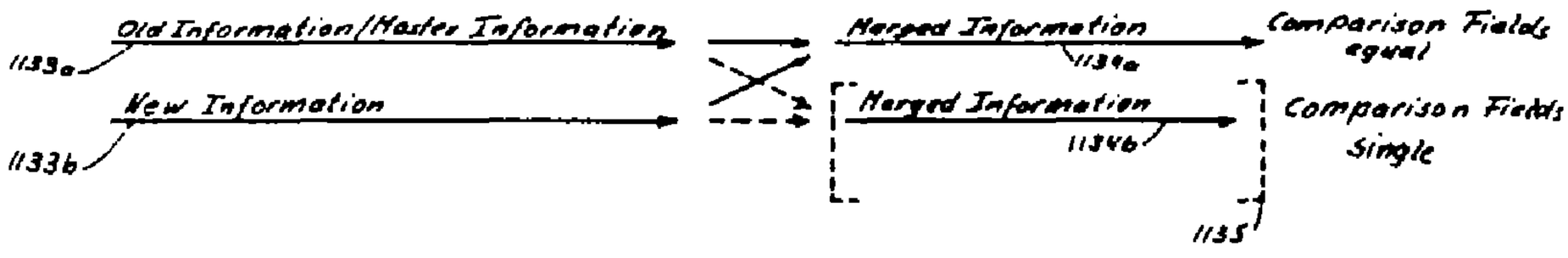

FIG.62

INVENTOR
GERHARD DIRKS

BY

Michael S. Striker
ATTORNEY

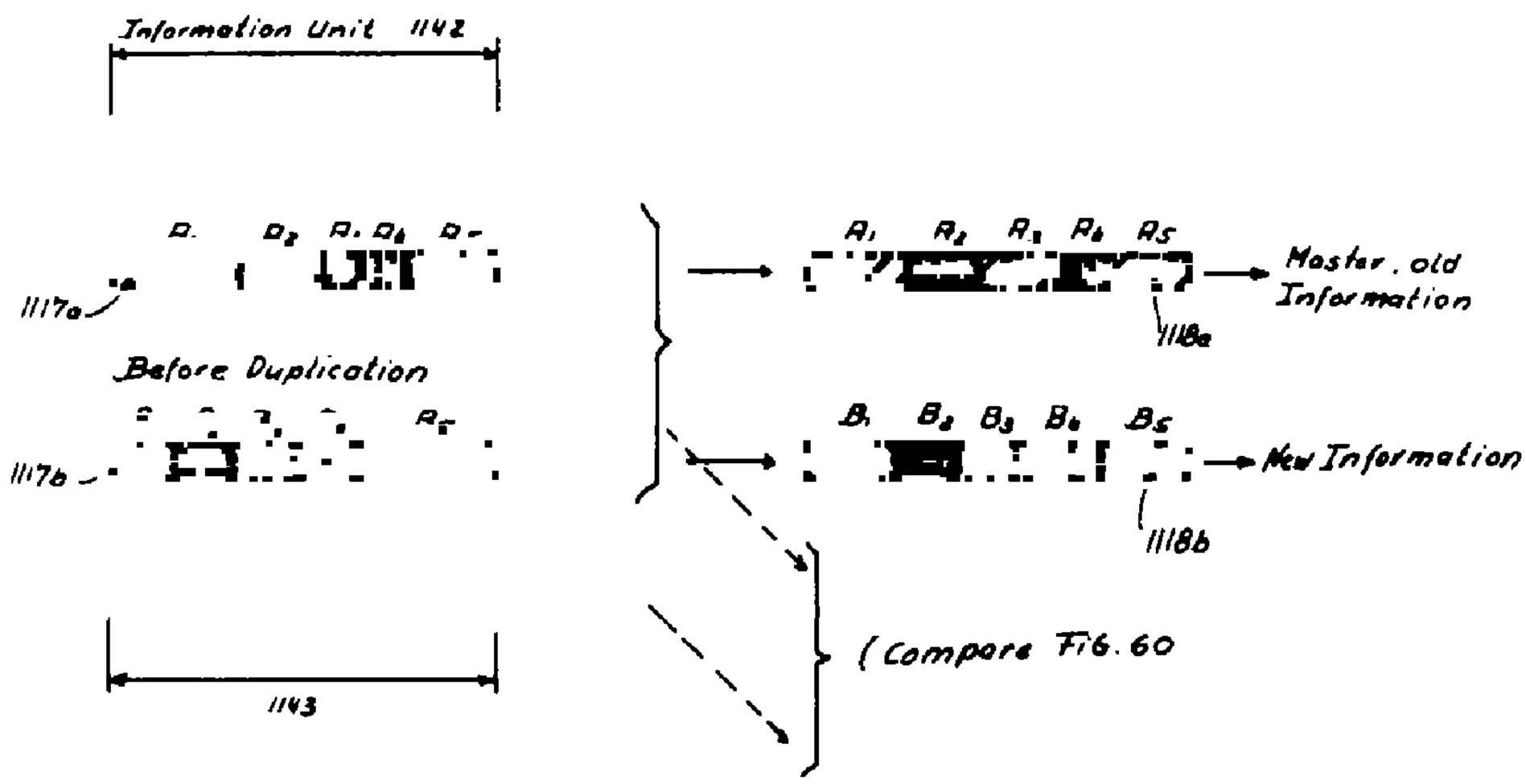

FIG. 63

INVENTOR.
GERHARD DIRKS
BY
Michael S. Striker
ATTORNEY

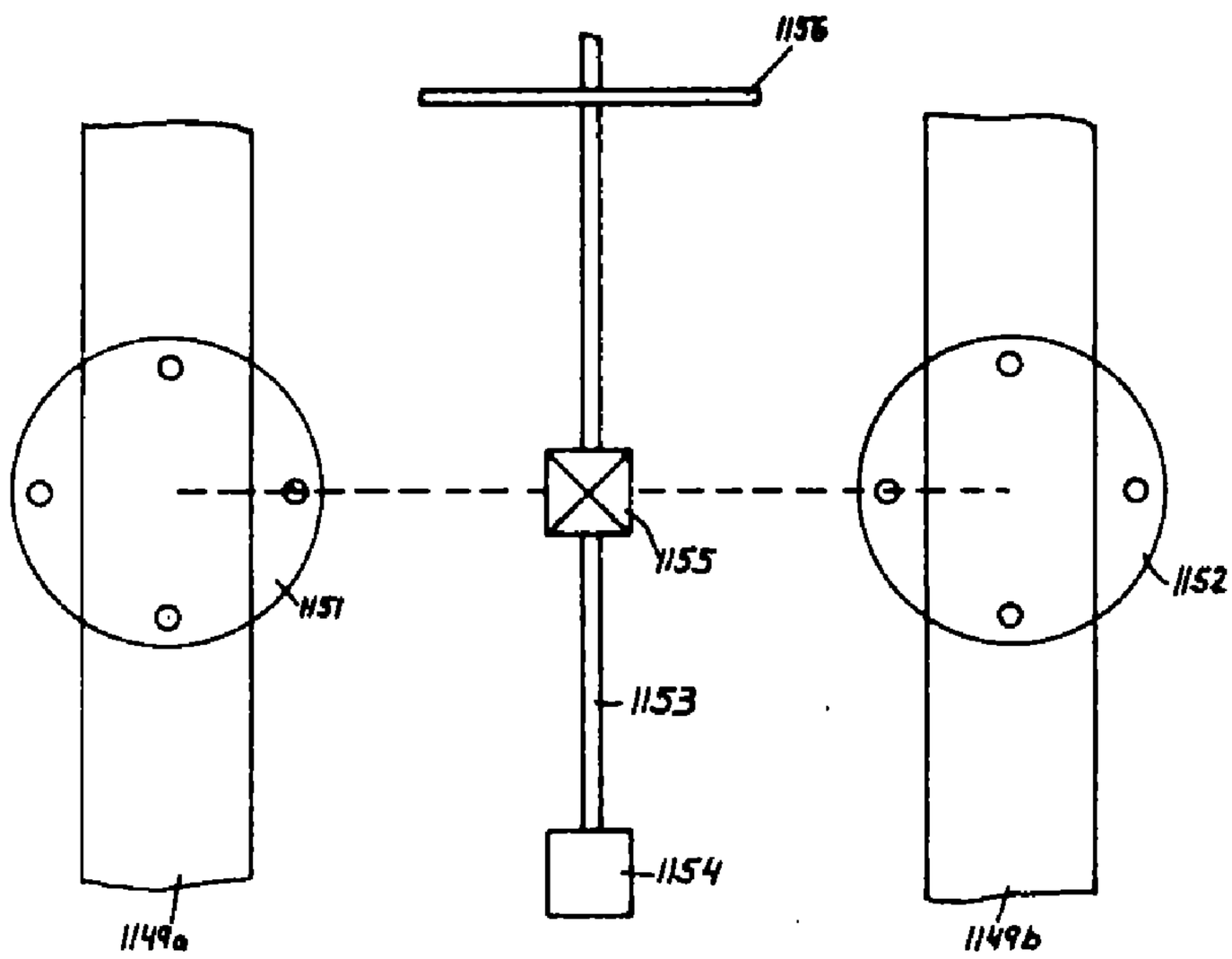

FIG. 64

INVENTOR.
GERHARD DIRKS
BY
Michael S. Striker
ATTORNEY

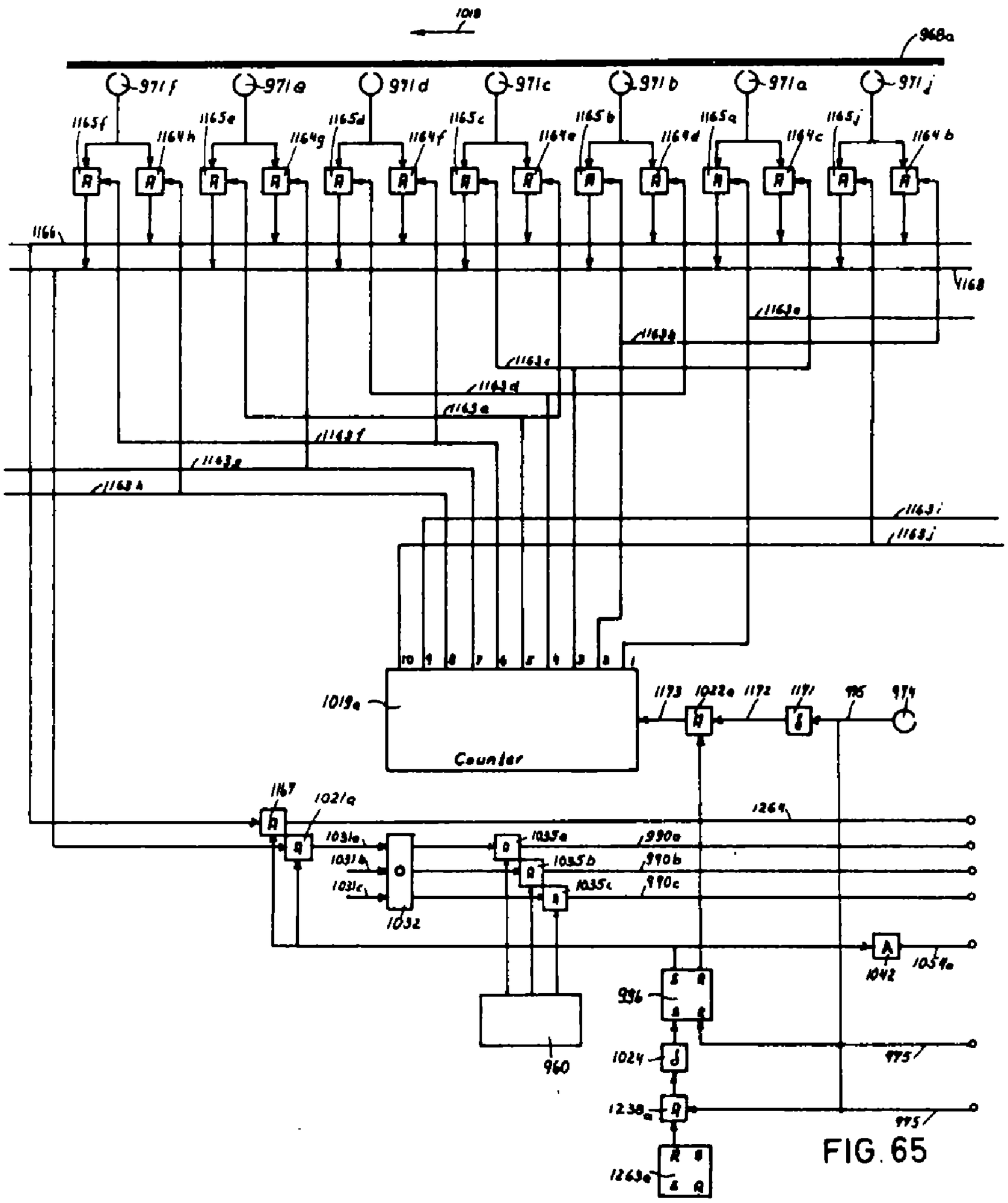

FIG. 65

INVENTOR.
GERHARD DIRKS

BY

Michael S. Striker
ATTORNEY

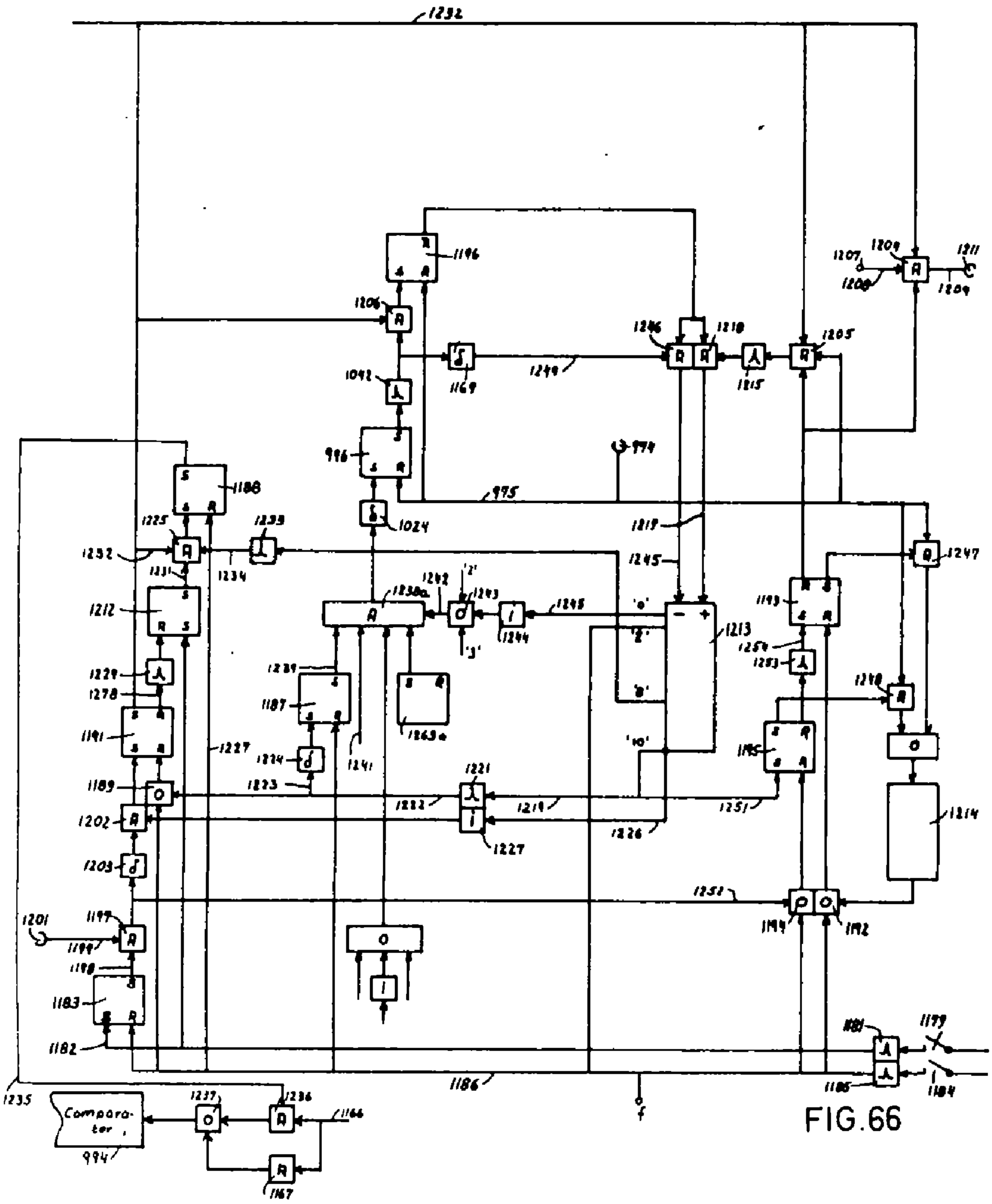

FIG. 66

INVENTOR
GERHARD DIRKS

BY

Michael S. Striker
ATTORNEY

DATA HANDLING SYSTEM

Filed Aug. 9, 1963 183 Sheets-Sheet 65

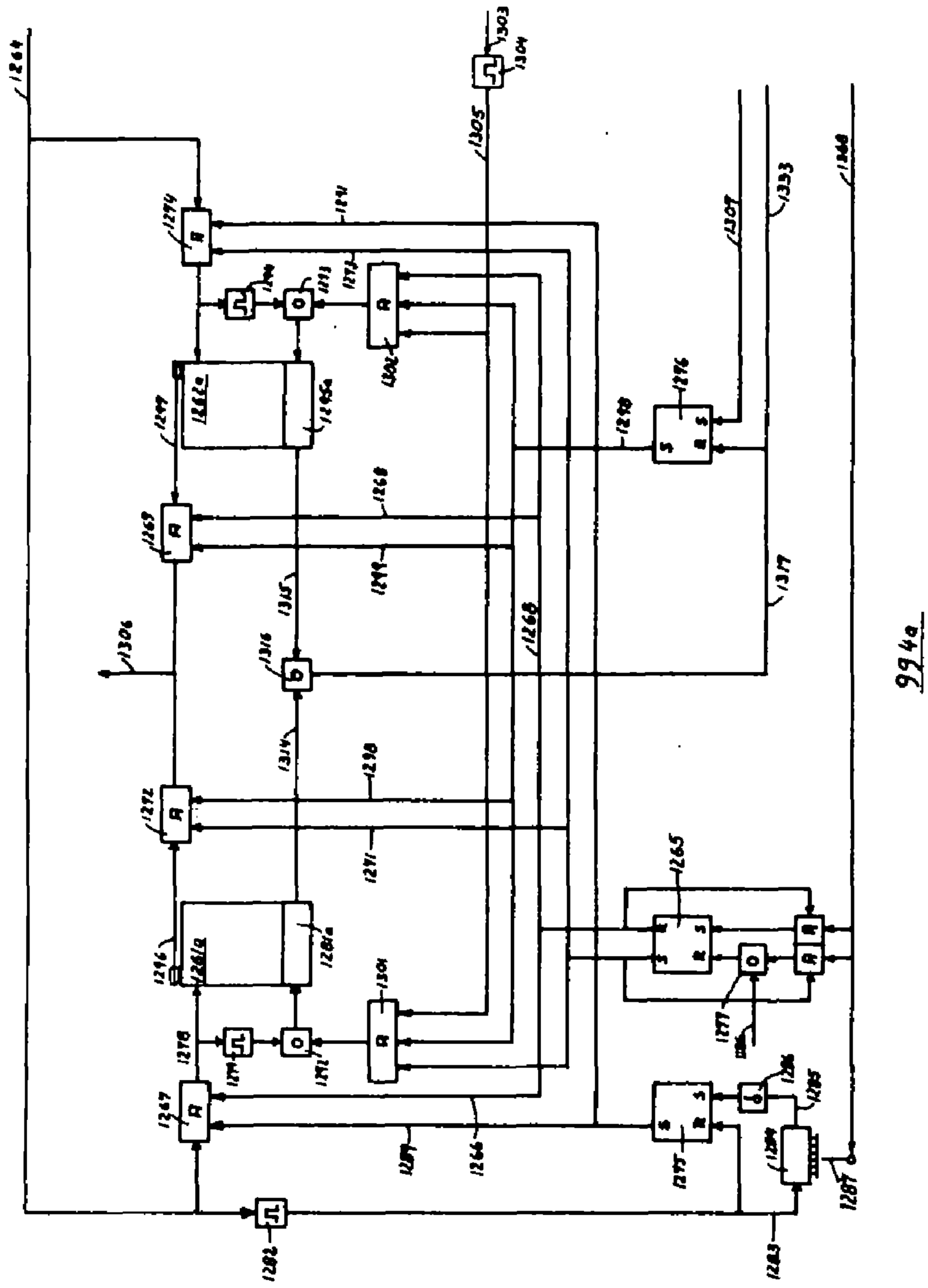

994a

FIG.67 a

INVENTOR
GERHARD DIRKS
BY Michael S. Striker
ATTORNEY

DATA HANDLING SYSTEM

Filed Aug. 9, 1963 183 Sheets-Sheet 66

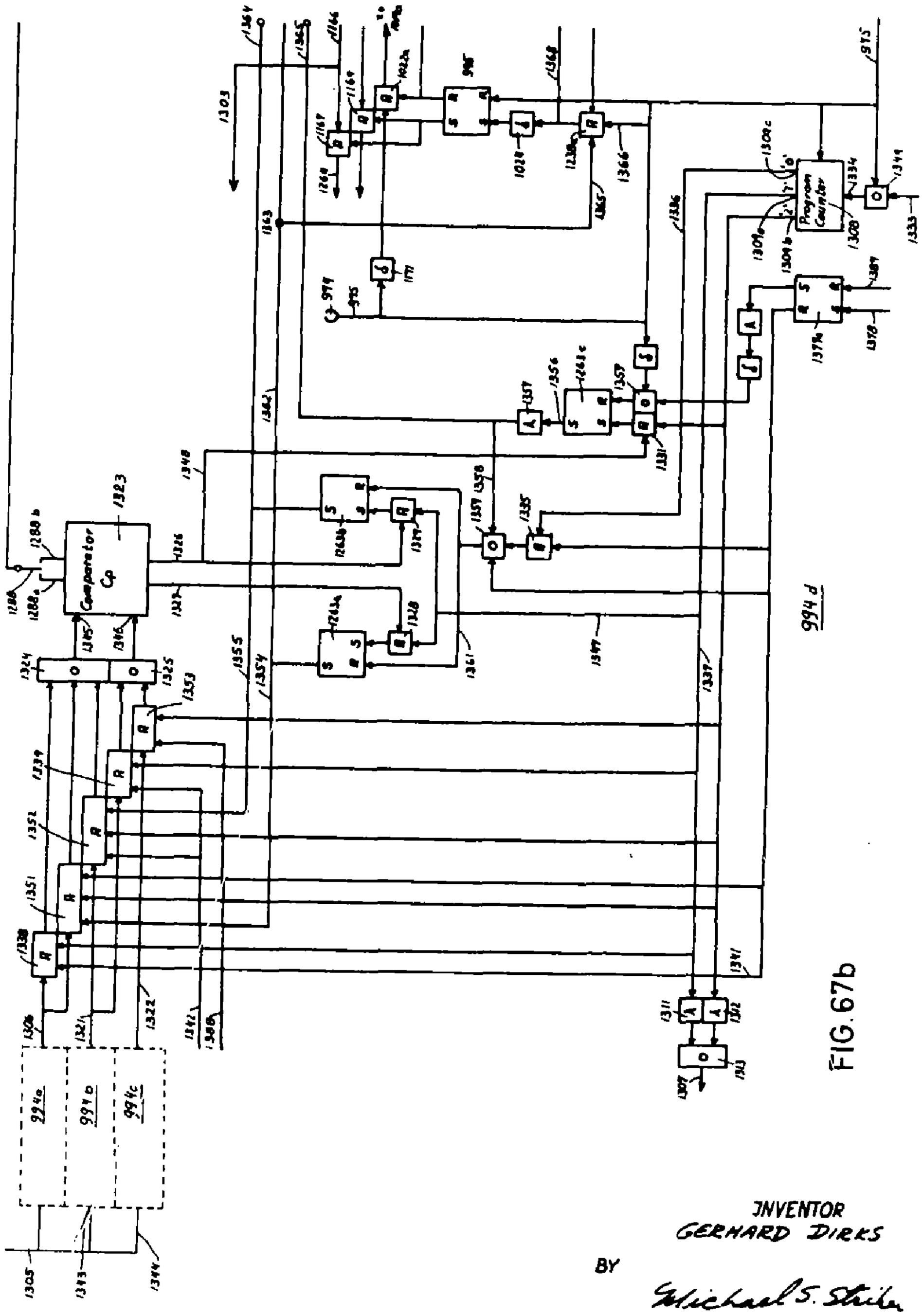

FIG. 67b

INVENTOR
GERHARD DIRKS
BY
Michael S. Striker
ATTORNEY

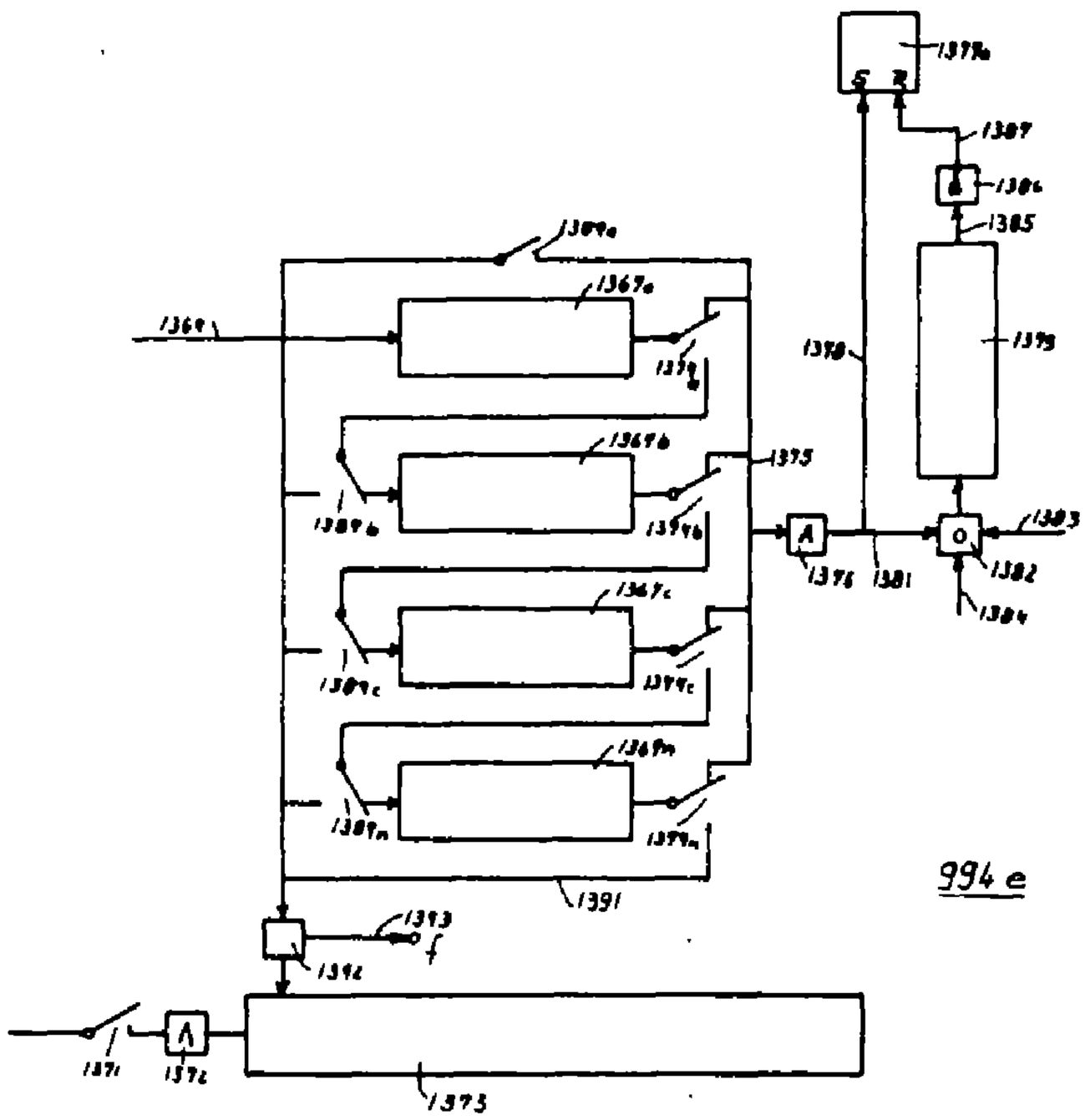

FIG. 67c

INVENTOR
GERHARD DIRKS
BY
Michael S. Striker
ATTORNEY

DATA HANDLING SYSTEM

Filed Aug. 9, 1963 183 Sheets-Sheet 68

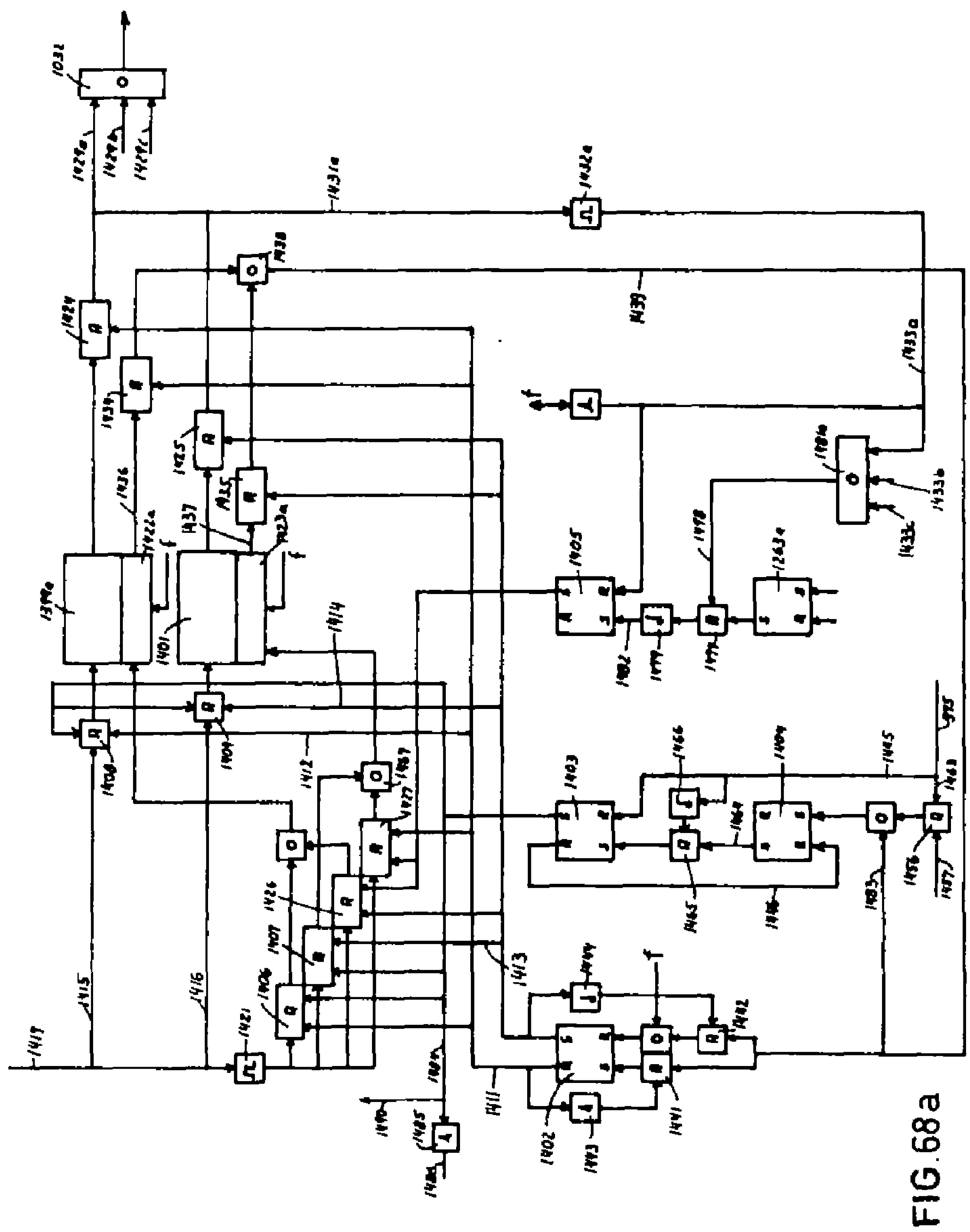

FIG. 68a

INVENTOR
GERHARD DIRKS

BY

Michael S. Striker
ATTORNEY

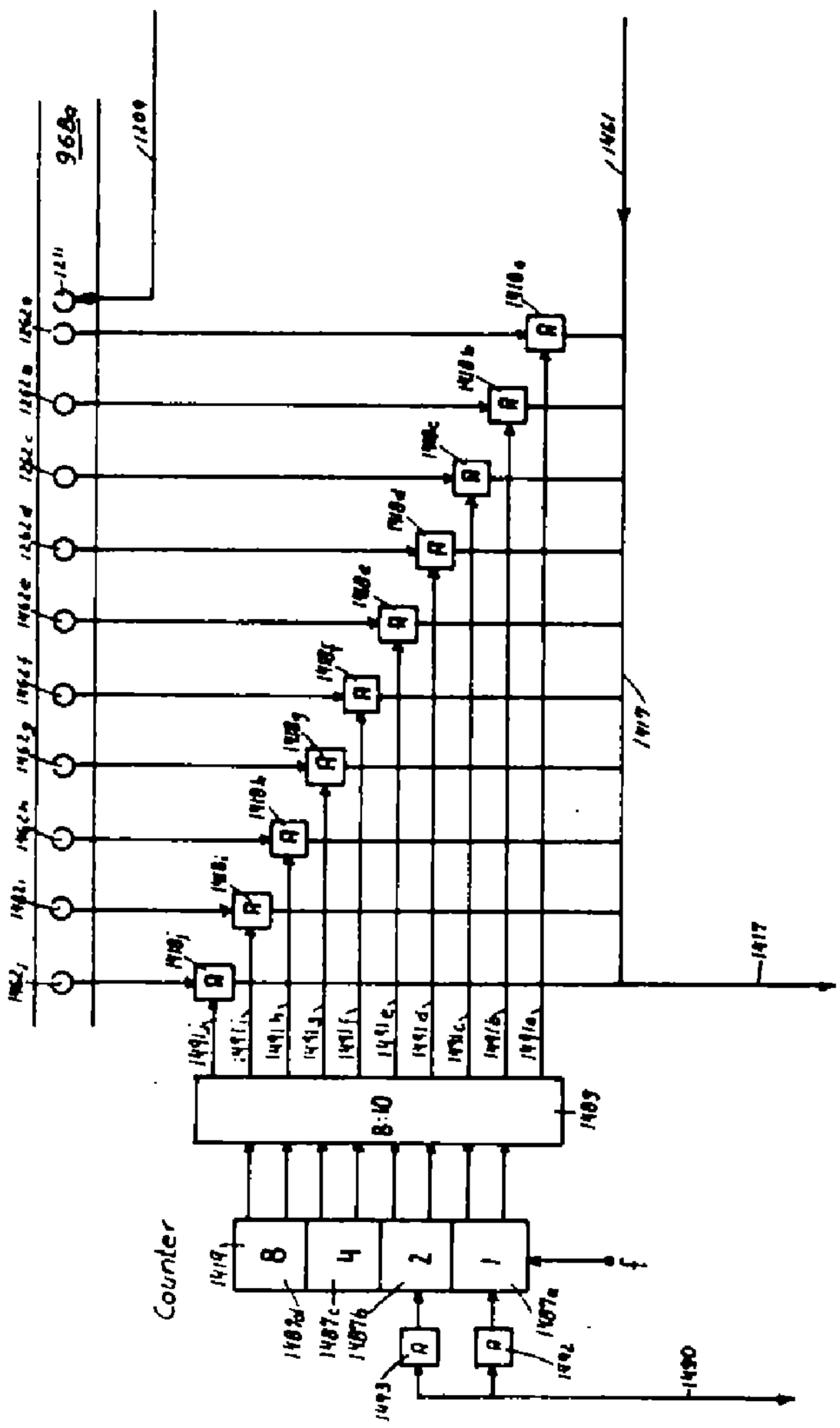
Counter
8
4
2
1
f
B:10
1489
1490
1491
1492
1493
1494
1495
1496
1497
1498
1499
1500
1501
1502
1503
1504
1505
1506
1507
1508
1509
1510
1511
1512
1513
1514
1515
1516
1517
1518
1519
1520
1521
1522
1523
1524
1525
1526
1527
1528

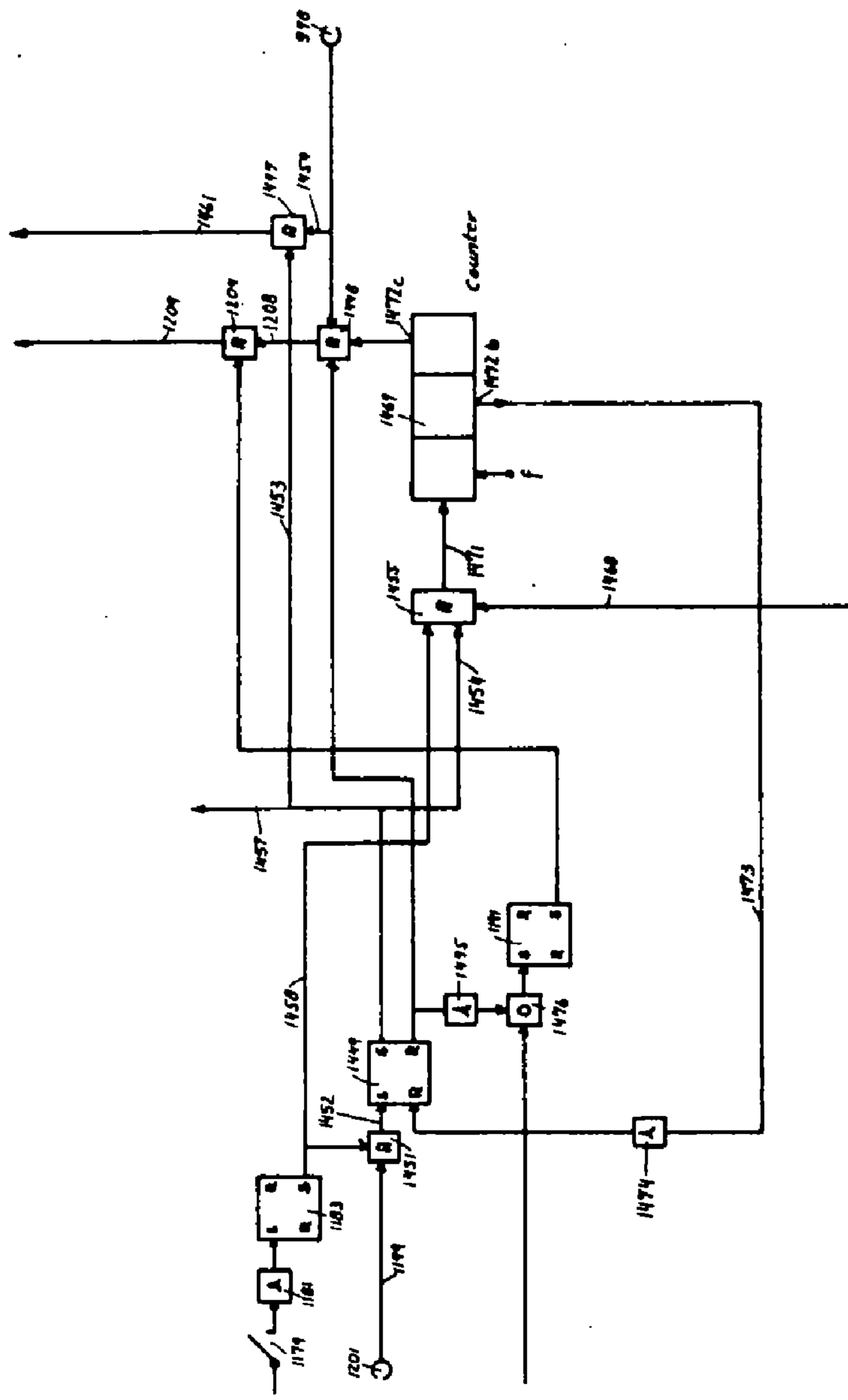

FIG. 68c

INVENTOR
GERHARD DIRKS

BY Michael S. Striker
ATTORNEY

DATA HANDLING SYSTEM

Filed Aug. 9, 1963 183 Sheets-Sheet 71

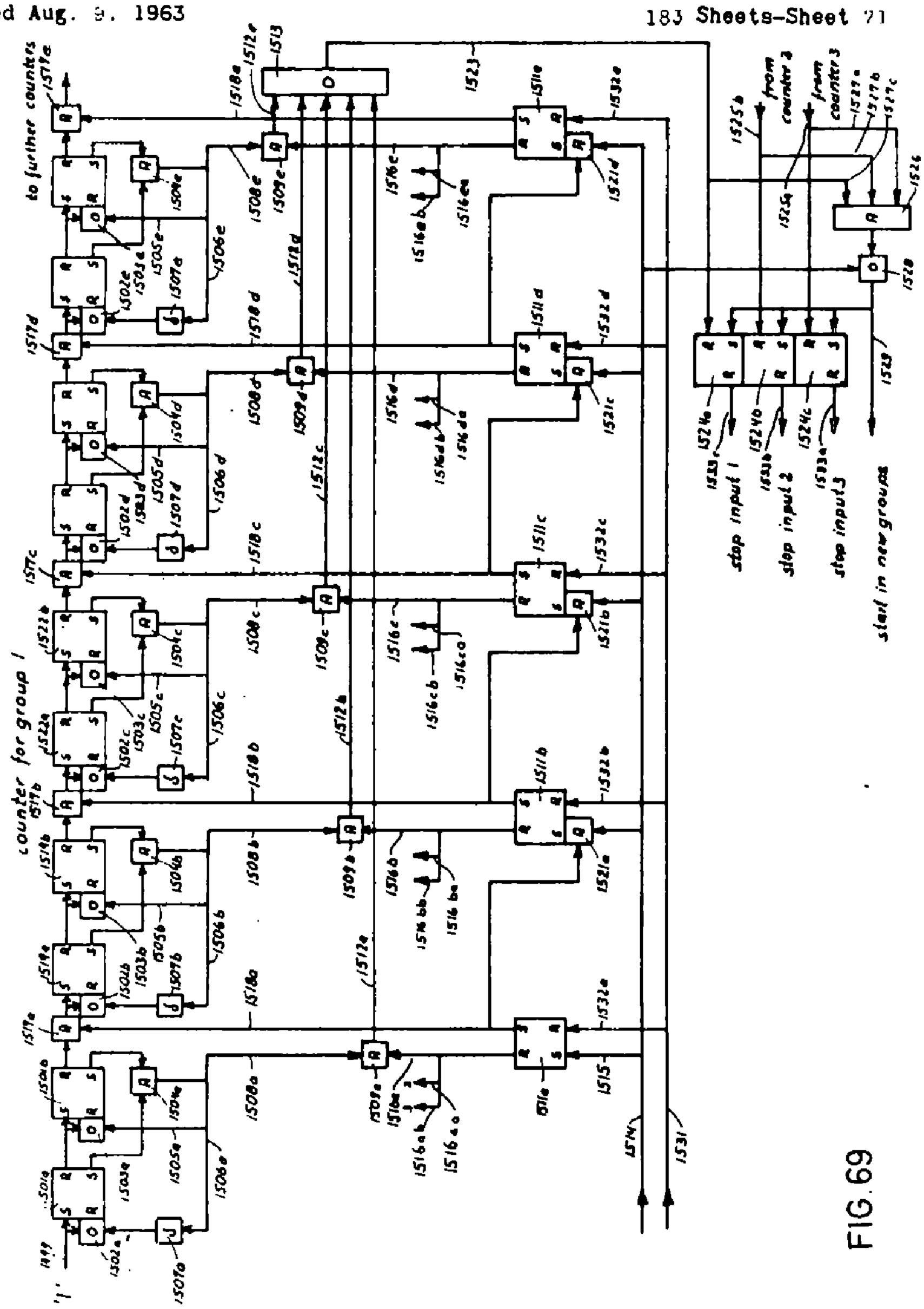

FIG. 69

INVENTOR
GERHARD DIRKS

BY Michael S. Striker
ATTORNEY

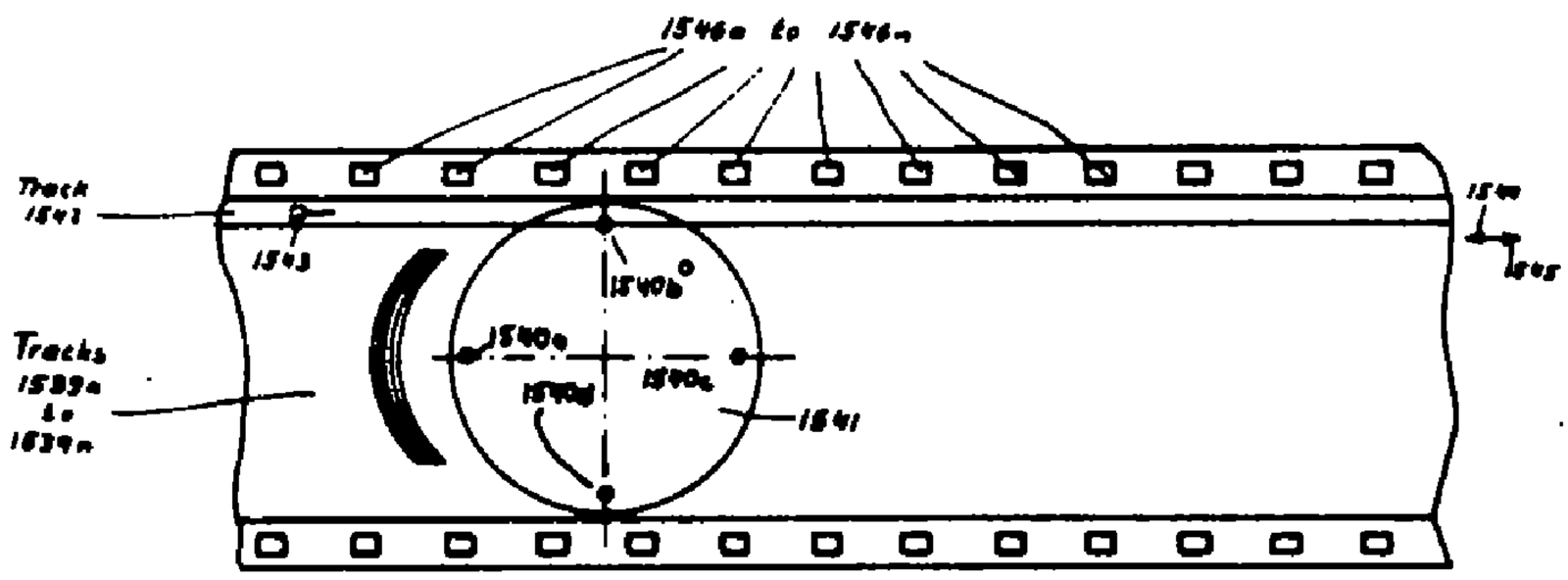

FIG. 70

INVENTOR.
GERHARD DIRKS
BY
Michael S. Striker
ATTORNEY

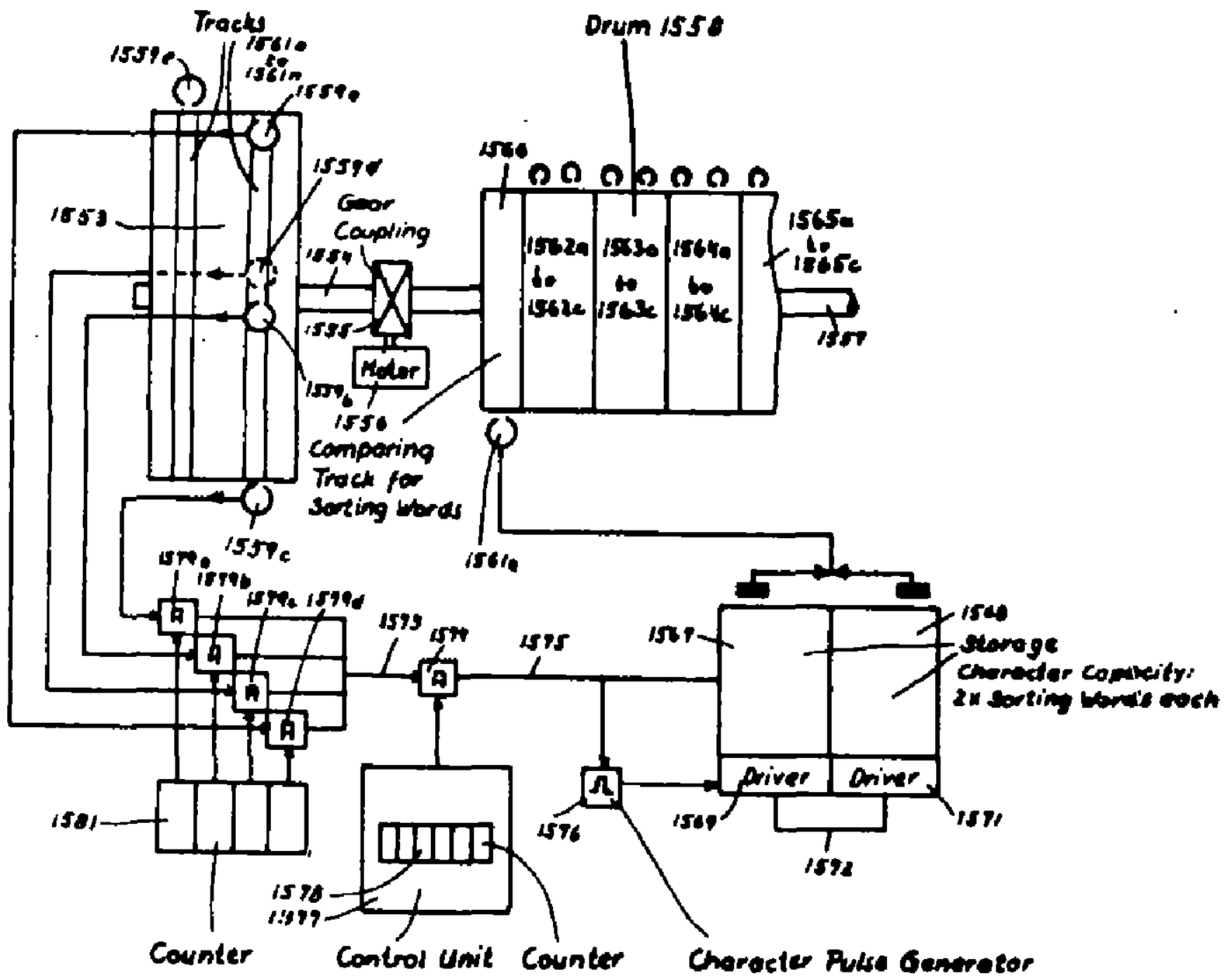

FIG.71

INVENTOR.
GERHARD DIRKS
BY Michael S. Striker
ATTORNEY

DATA HANDLING SYSTEM

Filed Aug. 9, 1963 183 Sheets-Sheet 74

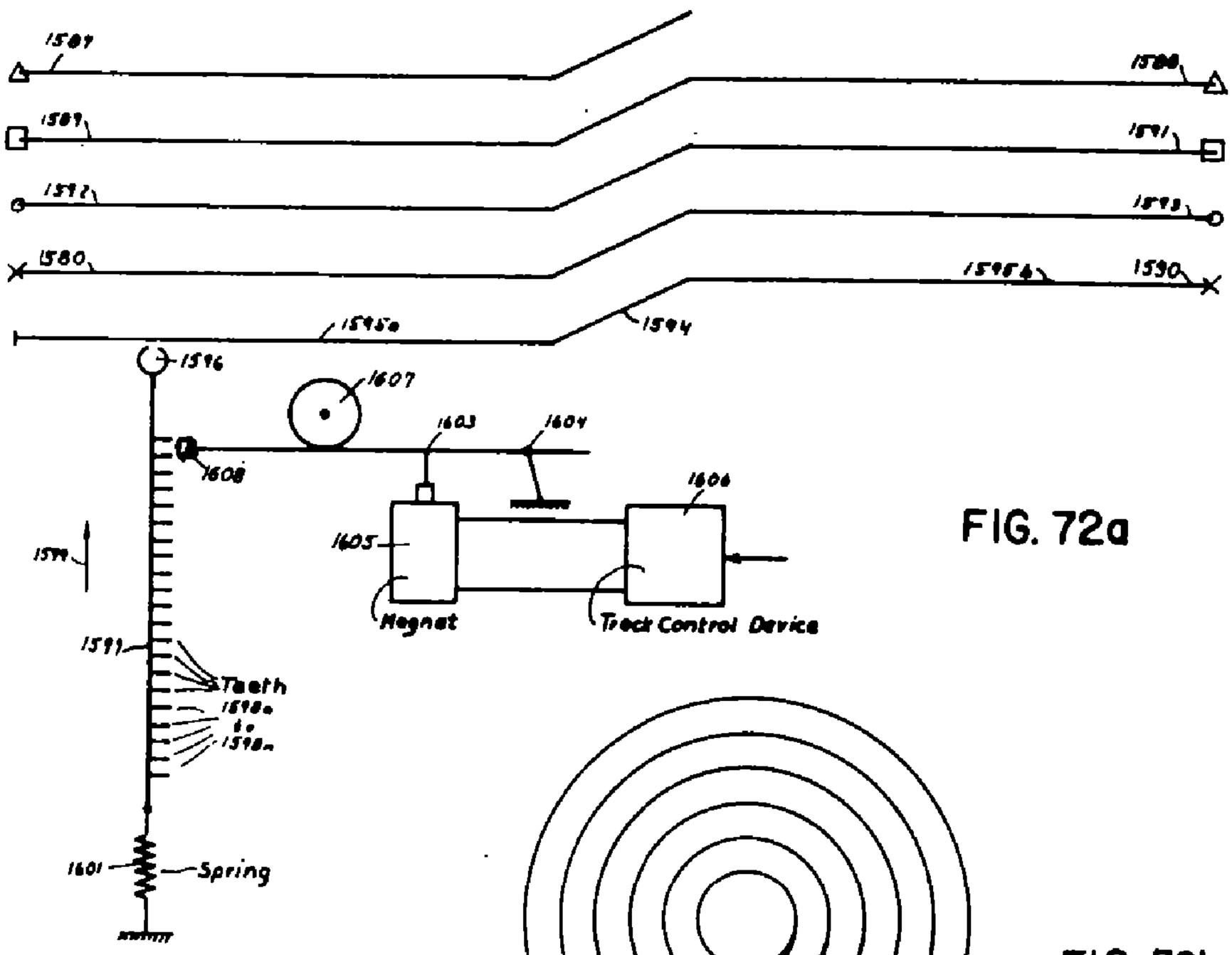

FIG. 72a

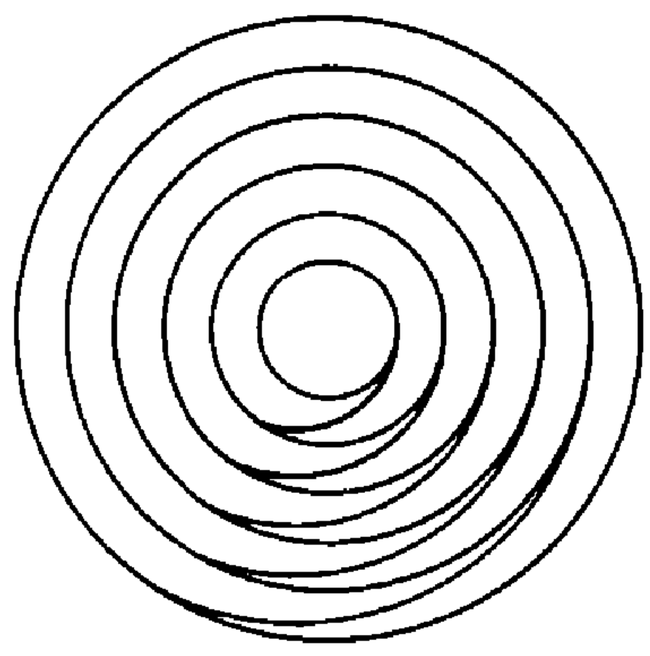

FIG. 72b

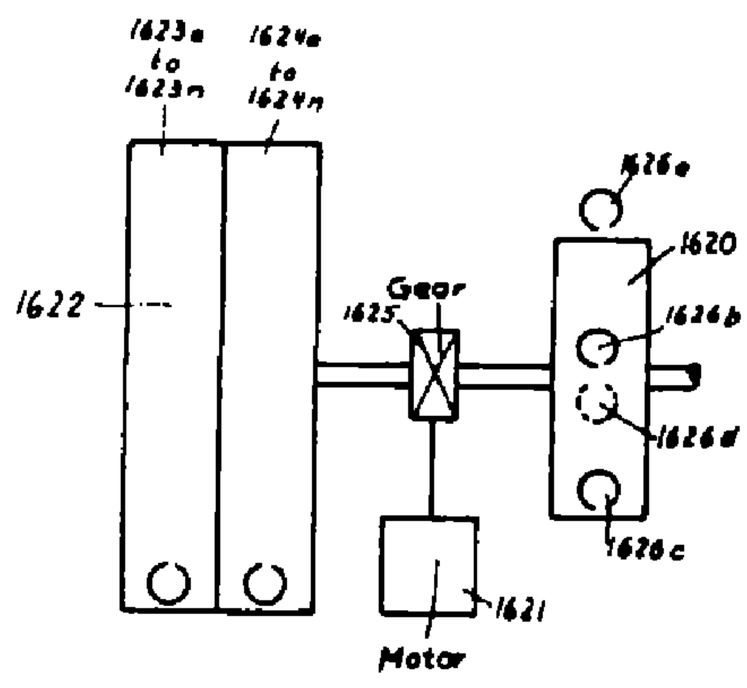

FIG. 73

INVENTOR
GERHARD DIRKS

BY

Michael S. Striker

ATTORNEY

DATA HANDLING SYSTEM

Filed Aug. 9, 1963 183 Sheets-Sheet 75

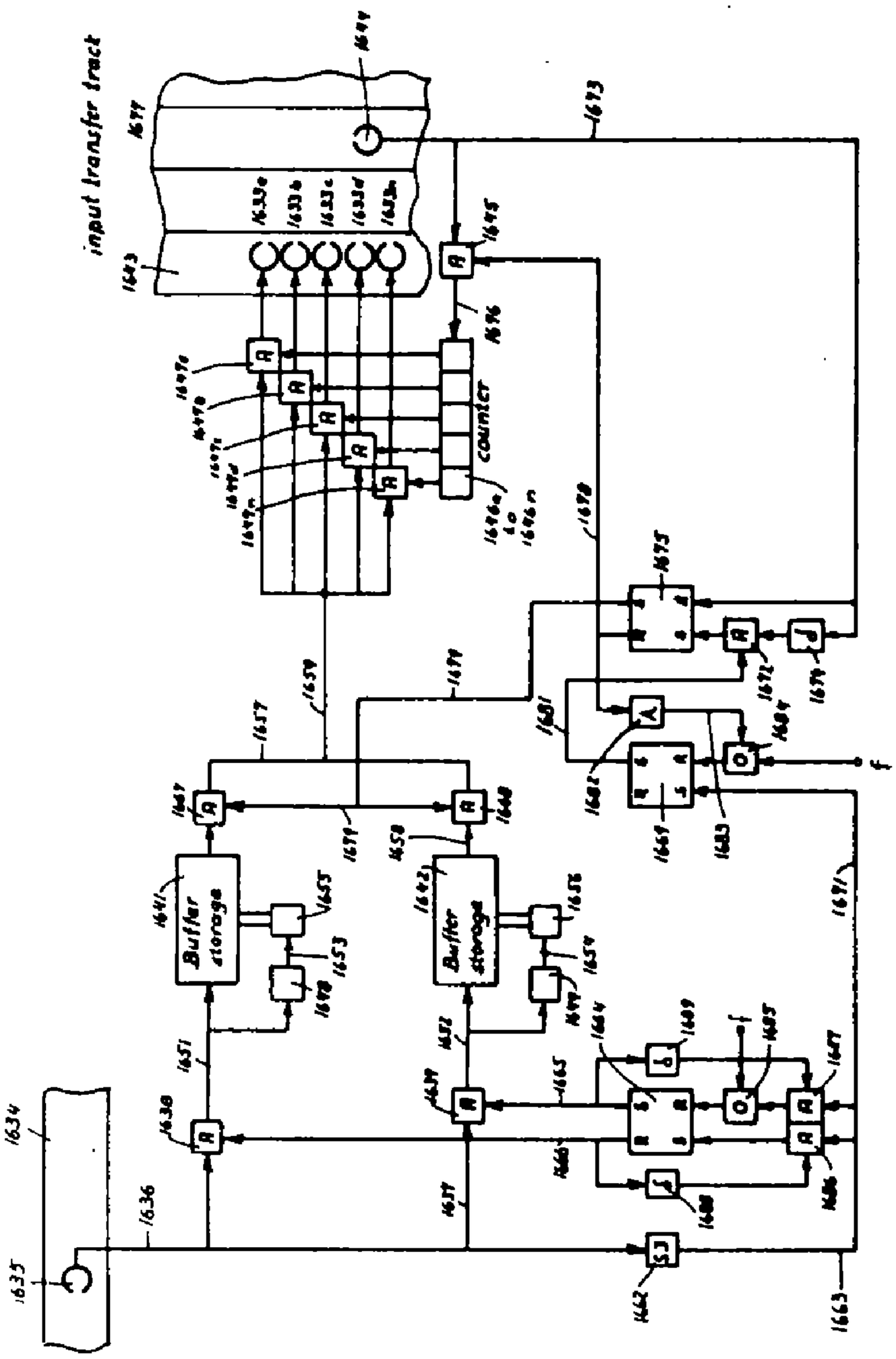

FIG. 74

INVENTOR
GERHARD DIRKS
BY
Michael S. Striker
ATTORNEY

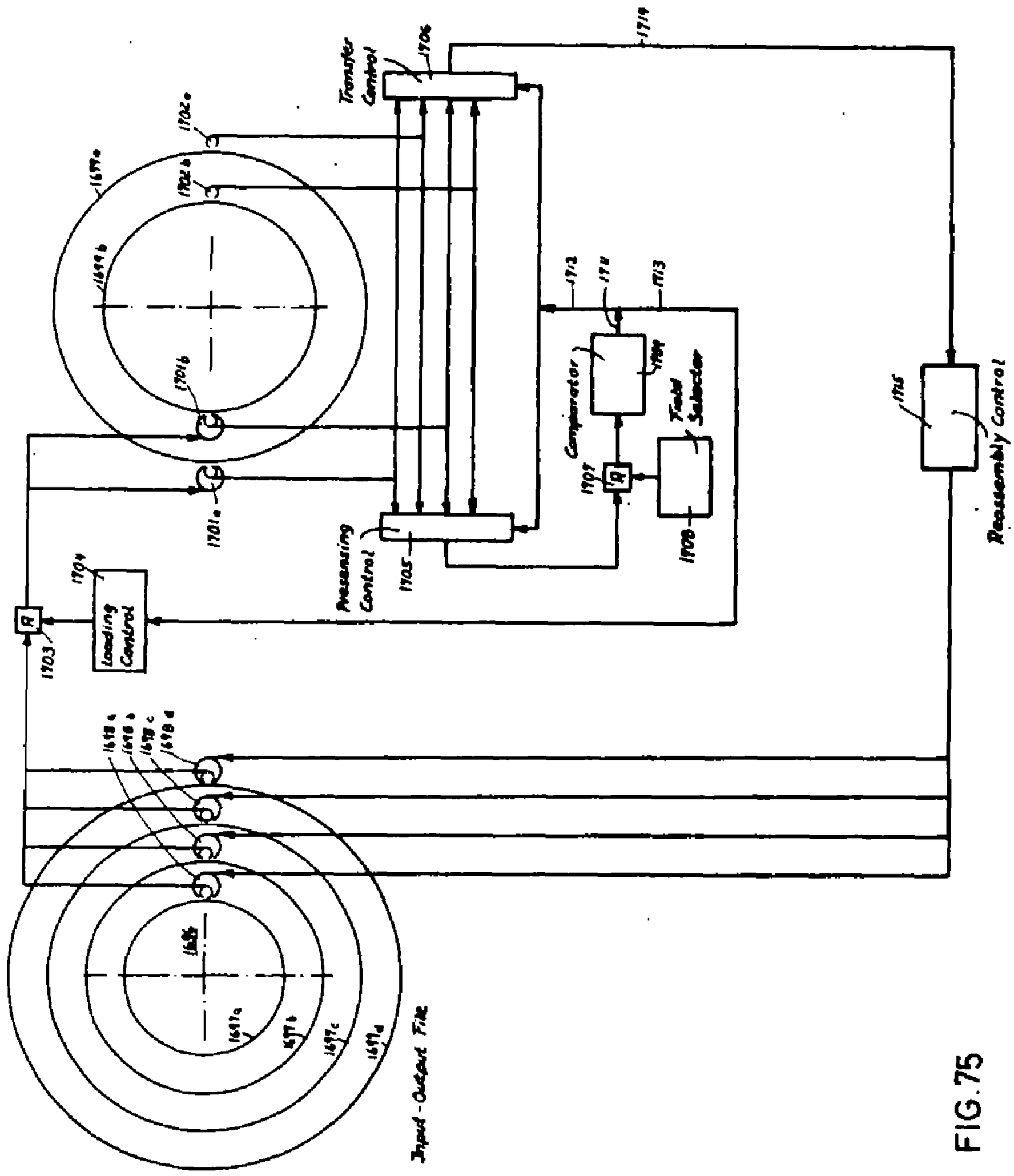

FIG. 75

INVENTOR.
GERHARD DIRKS

BY

Michael S. Striker

ATTORNEY

DATA HANDLING SYSTEM

Filed Aug. 9, 1963 183 Sheets-Sheet 77

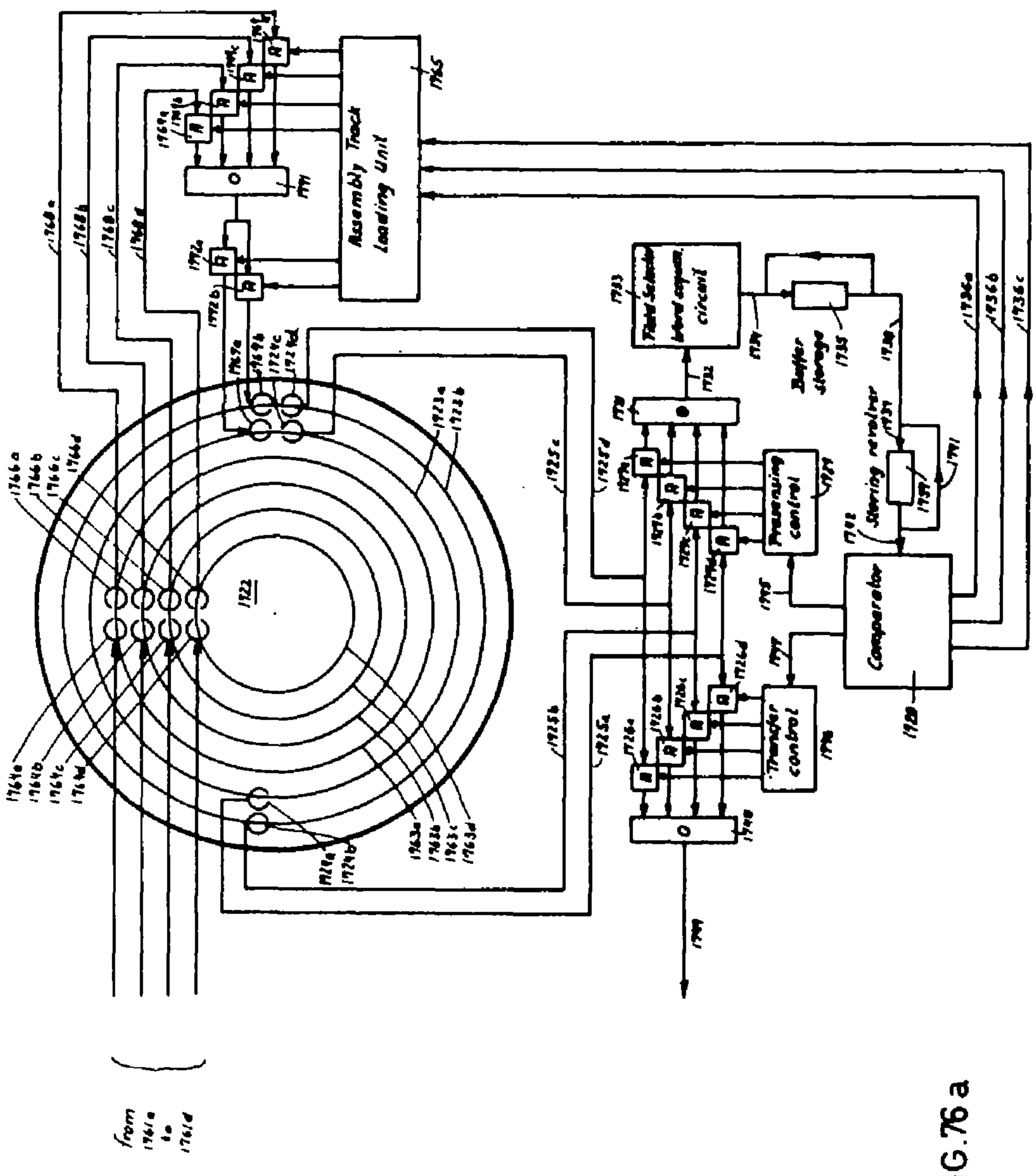

FIG. 76a

INVENTOR.
GERHARD DIRKS

BY

Michael S. Striker

ATTORNEY

DATA HANDLING SYSTEM

Filed Aug. 9, 1963 183 Sheets-Sheet 76

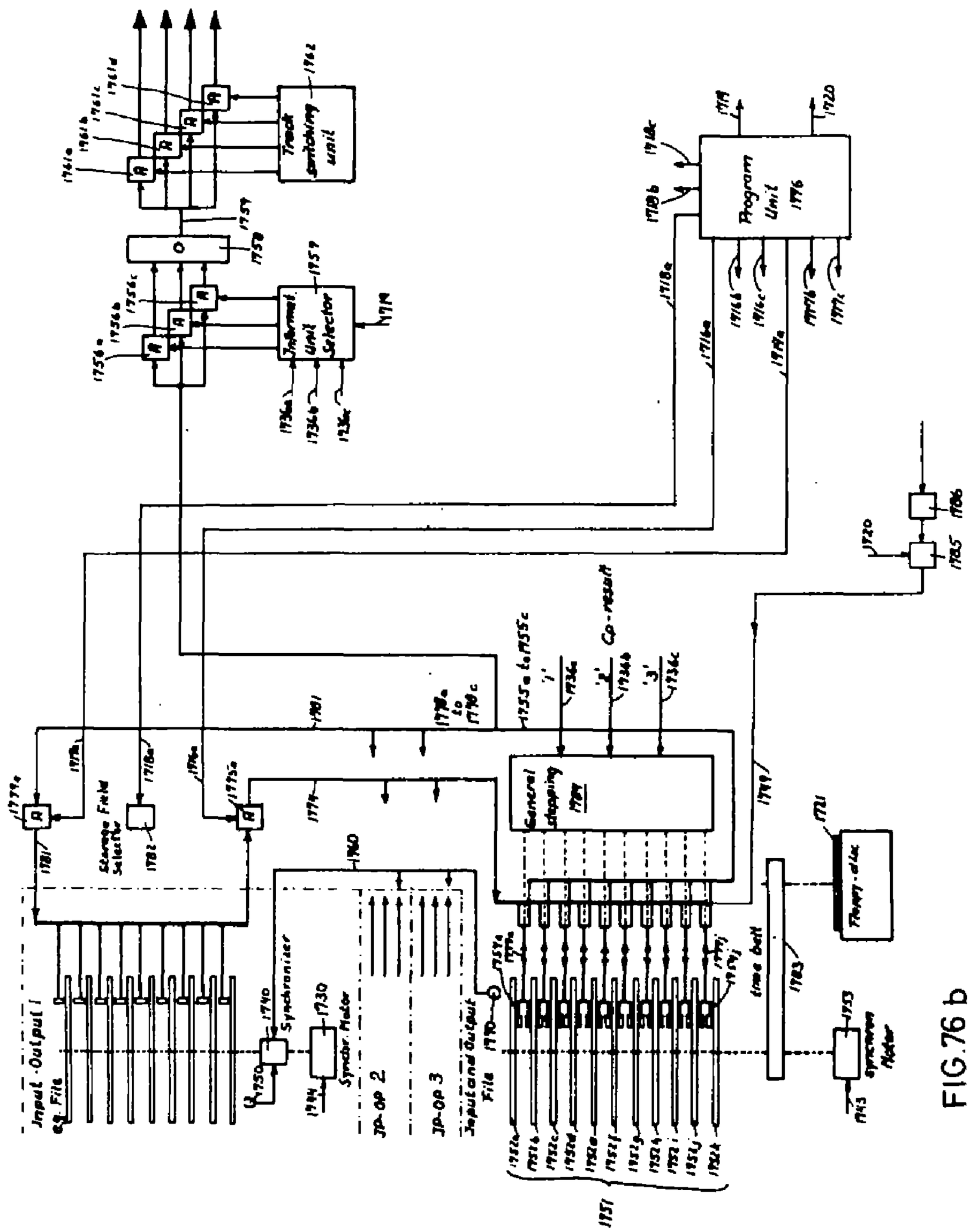

FIG. 76 b

INVENTOR.
GERHARD DIRKS

BY

Michael S. Striker

ATTORNEY

DATA HANDLING SYSTEM

Filed Aug. 9, 1963 183 Sheets-Sheet 71

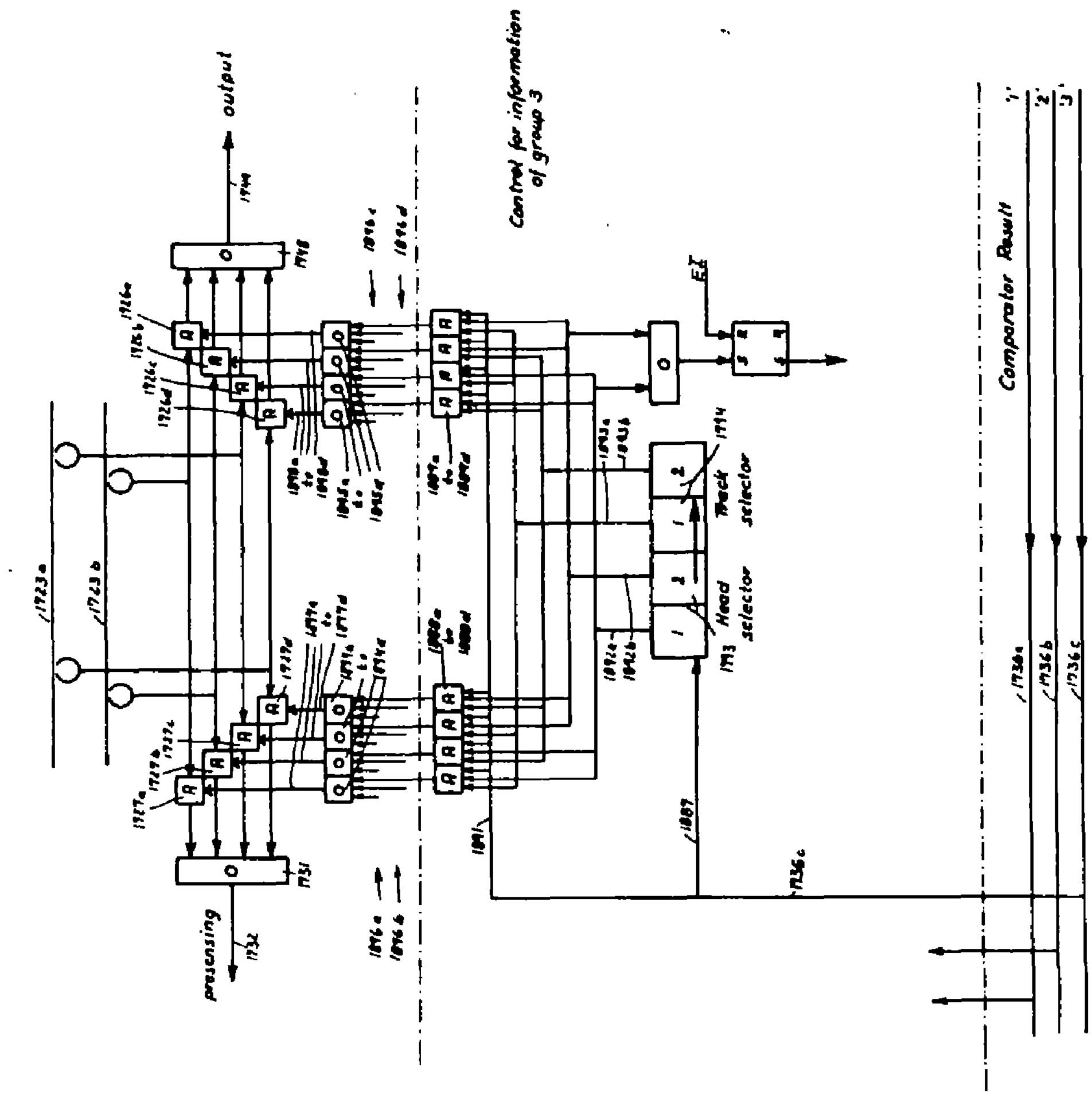

FIG. 77a

INVENTOR.
GERHARD DIRKS

BY

Michael S. Striker

ATTORNEY

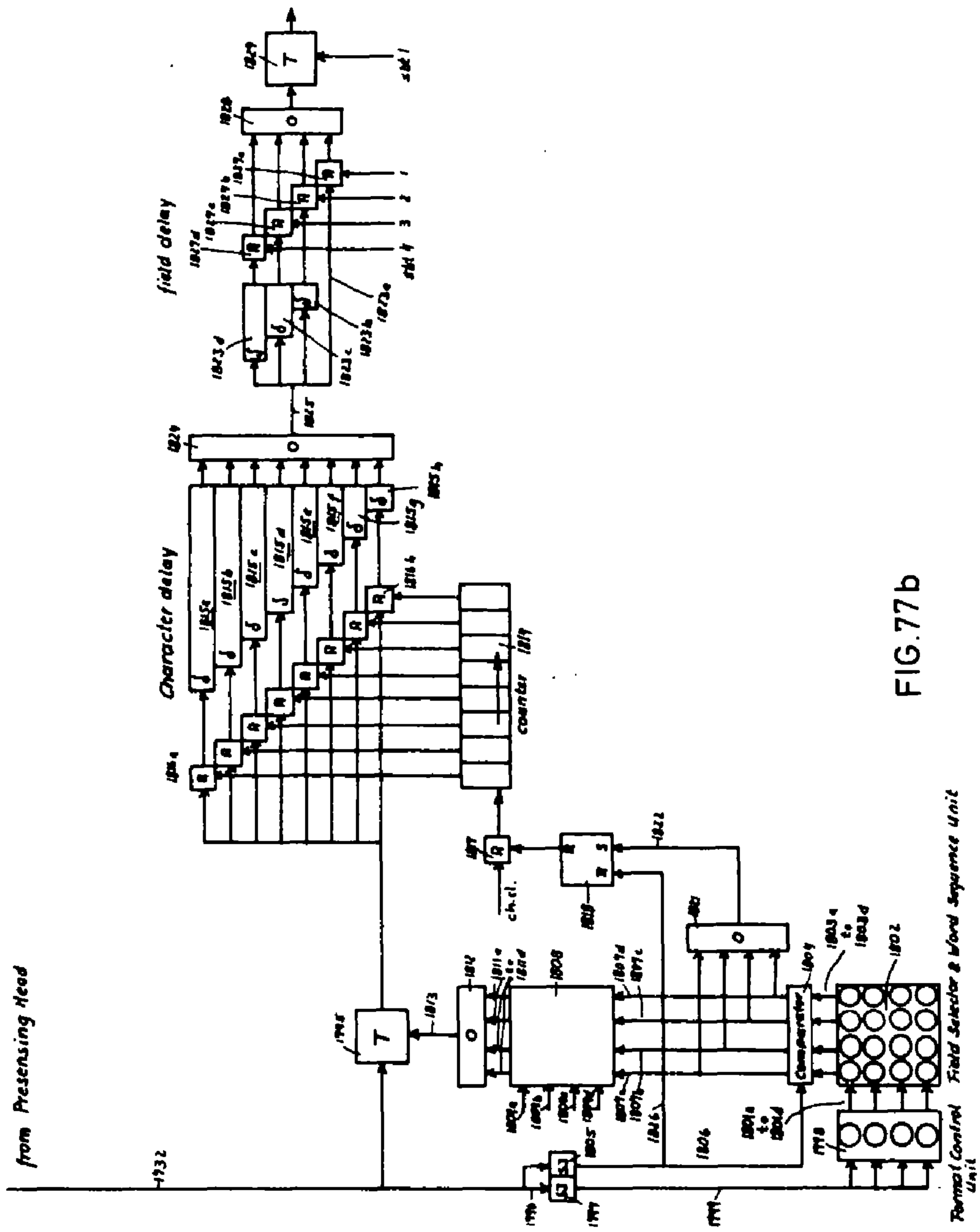

FIG. 77b

INVENTOR.
GERHARD DIRKS

BY

Michael S. Striker

ATTORNEY

DATA HANDLING SYSTEM

Filed Aug. 9, 1963 183 Sheets-Sheet 81

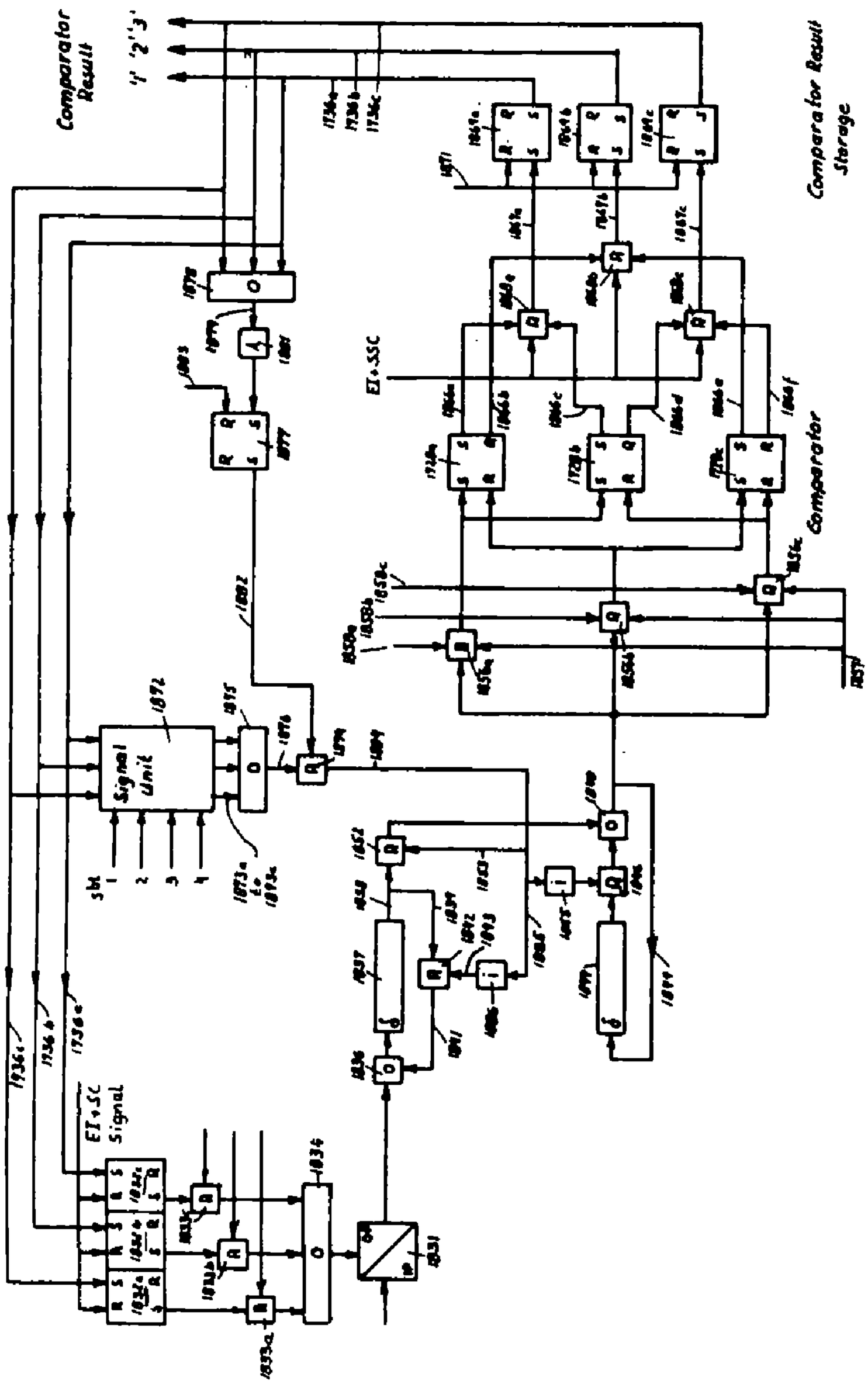

FIG.77c

INVENTOR.
GERHARD DIRKS
BY
Michael S. Striker
ATTORNEY

DATA HANDLING SYSTEM

Filed Aug. 9, 1963 183 Sheets-Sheet 83

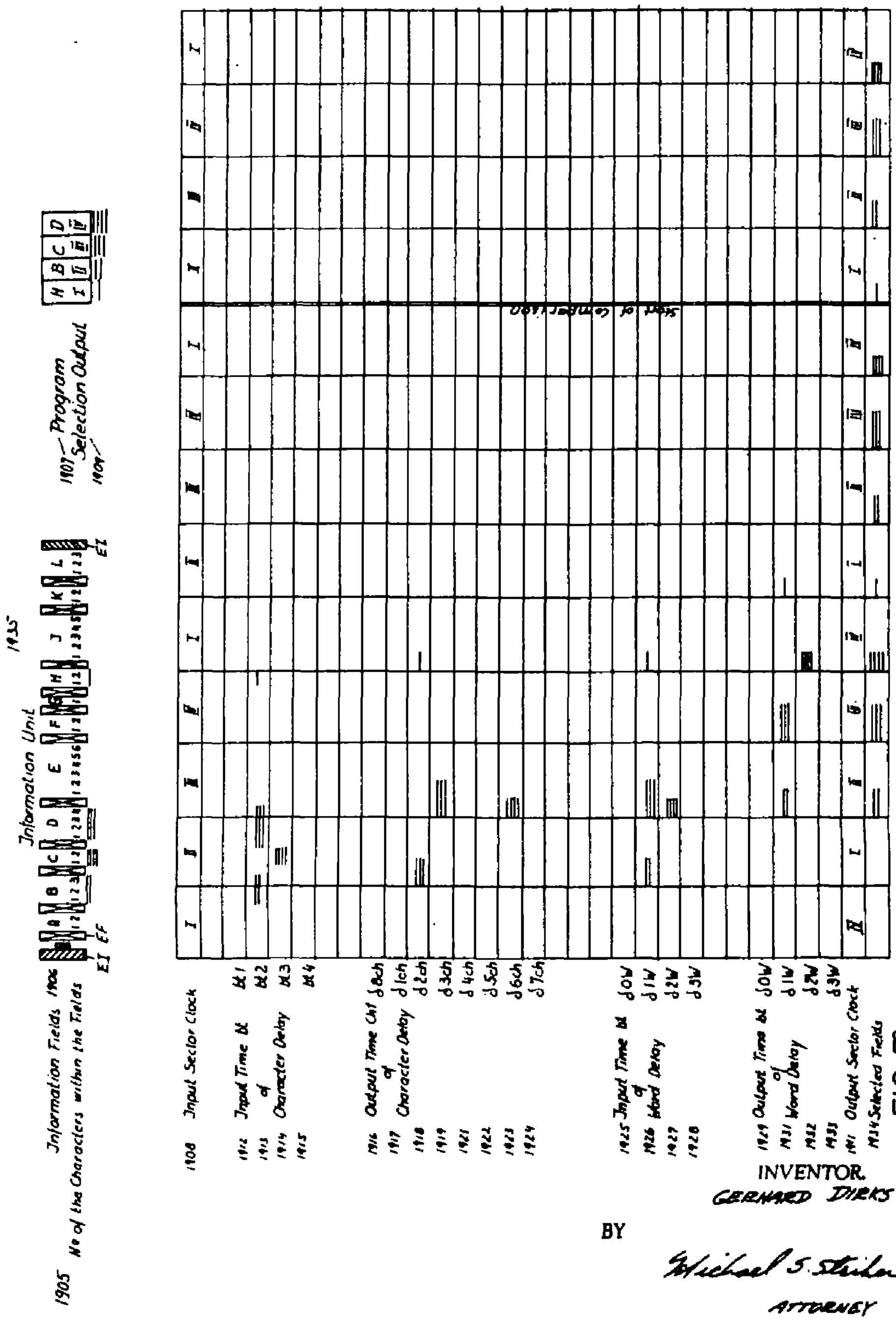

FIG. 78

INVENTOR.
GERHARD DIRKS

BY

Michael S. Striker
ATTORNEY

C. Marshall Dann, Commissioner of Patents and Trademarks, Petitioner, v. Thomas R. Johnston., 425 U.S. 219 (1976). Appendix. 16 July 1975. The Making of Modern Law: U.S. Supreme Court Records and Briefs, 1832–1978, link.gale.com/apps/doc/DW0110790660/SCRB?u=mizzou_law&sid=bookmark-SCRB&xid=25db0ec2&pg=1. Accessed 8 Nov. 2021.